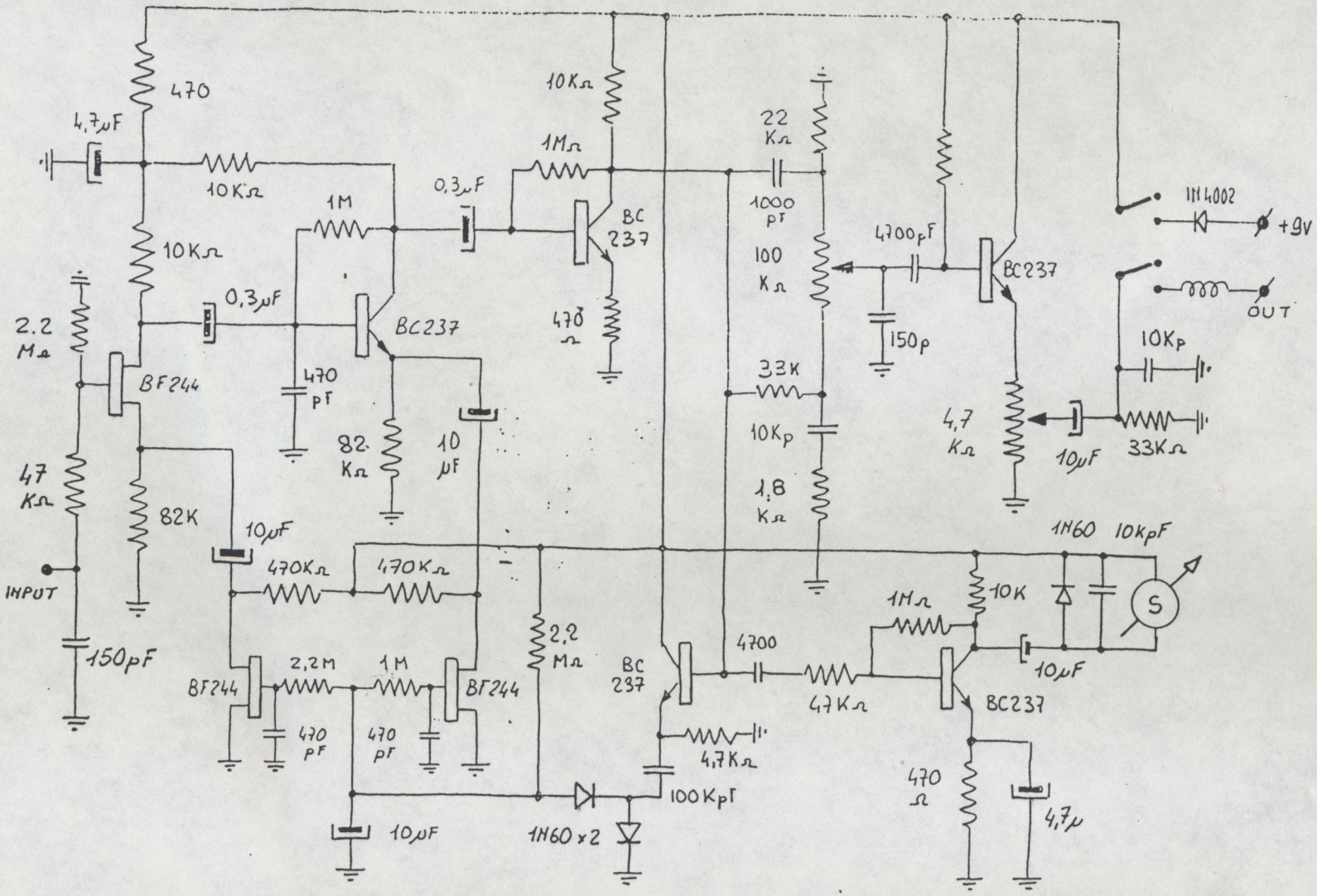

MB+5

2665

Kompressor Mike