Albrecht Electronic GmbH
Otto-Hahn-Str. 7, D-2077 Trittau
Telefon: 0 41 54 / 80 72-0
Telex: 2 189 406 agru d

DM-313P

SPECIFICATIONS:

1. Type	: Dynamic Moving Coil
2. Impedance	: 10K Ohm (at 1K Ohm Preamp)
3. Output Level	: -35dB (at 1K Ohm Preamp working) -78dB (at Mic only)
4. Max Output	: 1.5V
5. Frequency Response	: 300 - 6,000Hz (In case of Power Mike) 300 - 8,000Hz (In case of Standard Mike)
6. Polar Pattern	: Omni
7. Cable	: 1.8 meter Curling Cable 4 Conductor 1 Shielded
8. Switch	: Push-to-talk
9. Dimensions	: 60(W) x 92(L) x 38(D)mm
10. Net Weight	: 210 Grms

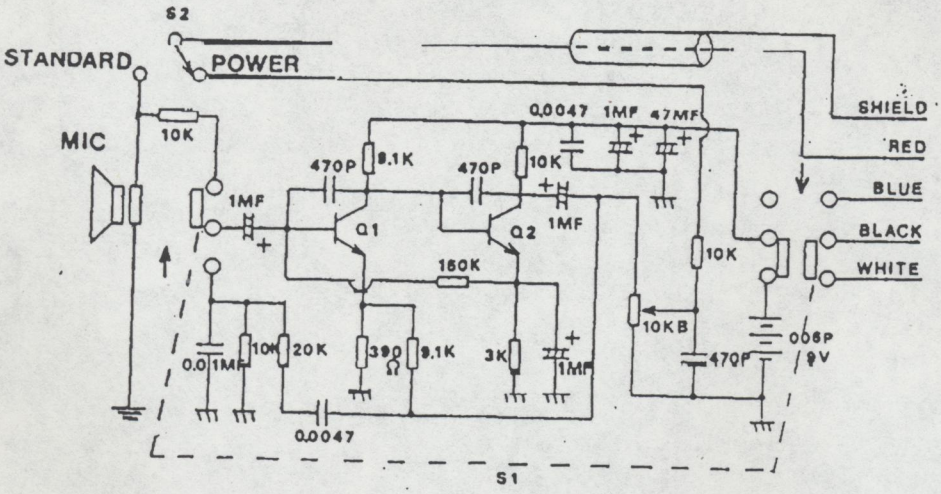

In case of relay switching:

Red	: Voice output
Shield	: Shield ground earth
Blue	: Unused
Black	: Relay
White	: Relay

In case of electronic switching:

Red	: Voice output
Shield	: Shield ground earch
Blue	: Electronic switching (Receiving side)
Black	: Ground earth
White	: Electronic switching (Transmission side)

EEEEE