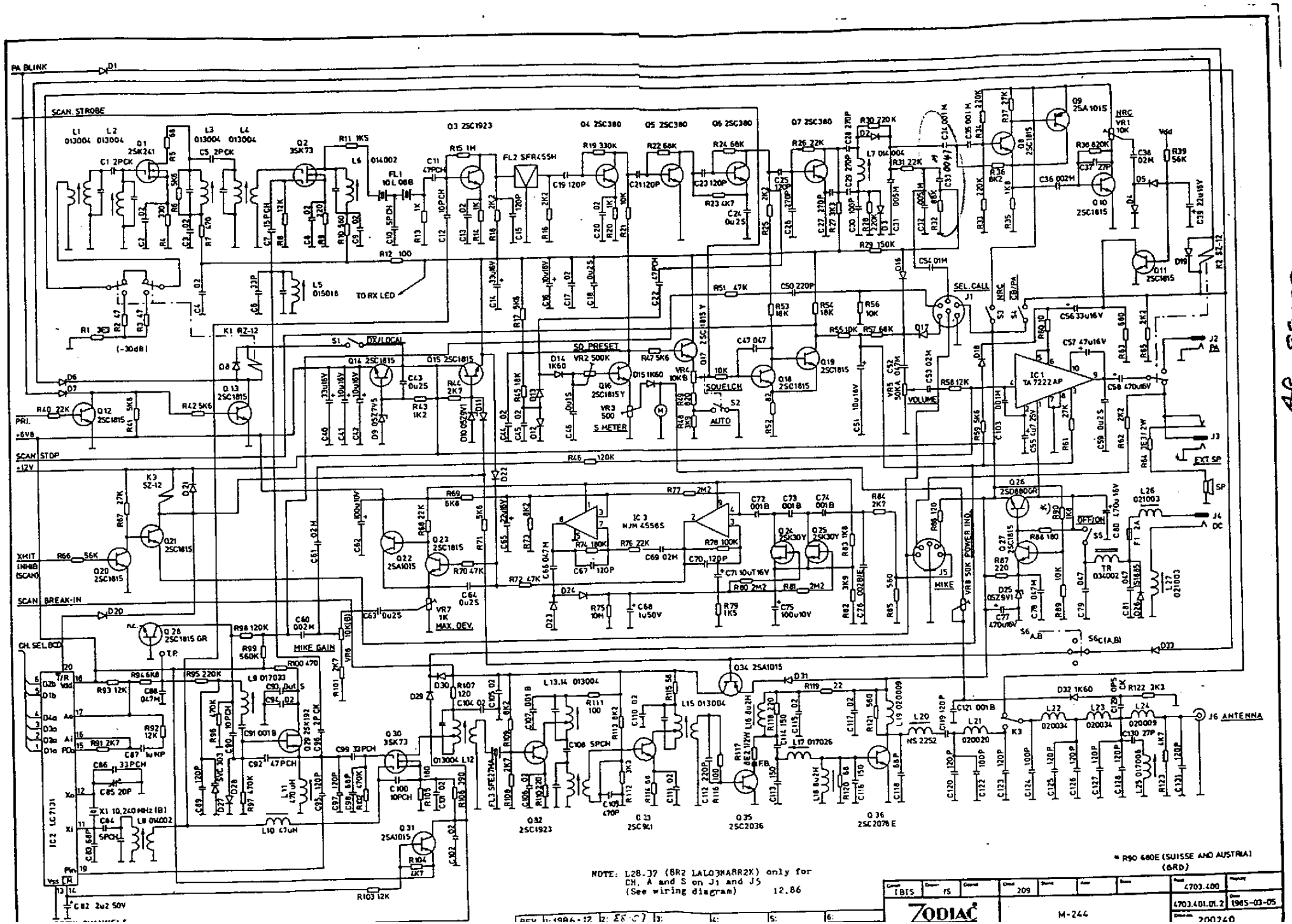
PA BLINK
SCAN. STROBE
TO RX LED
DX/LOCAL
SQ PRESET
SQUELCH
AUTO
S METER
VOLUME
SEL.CALL
NRC
CB/PA
EXT.SP
SCAN STOP
XMIT INHIB (SCAN)
SCAN BREAK-IN
CH.SEL.BCD
MIKE GAIN
MAX. DEV.
MIKE
POWER IND.
OFF ON
J6 ANTENNA
NOTE: L28-37 (8R2 LAL03NA8R2K) only for CH. A and S on J1 and J5 (See wiring diagram) 12.86
* R90 680E (SUISSE AND AUSTRIA) (8RD)
ZODIAC
M-244
4703.400
4703.401.01.2
1985-03-05
200240

AHS-88093