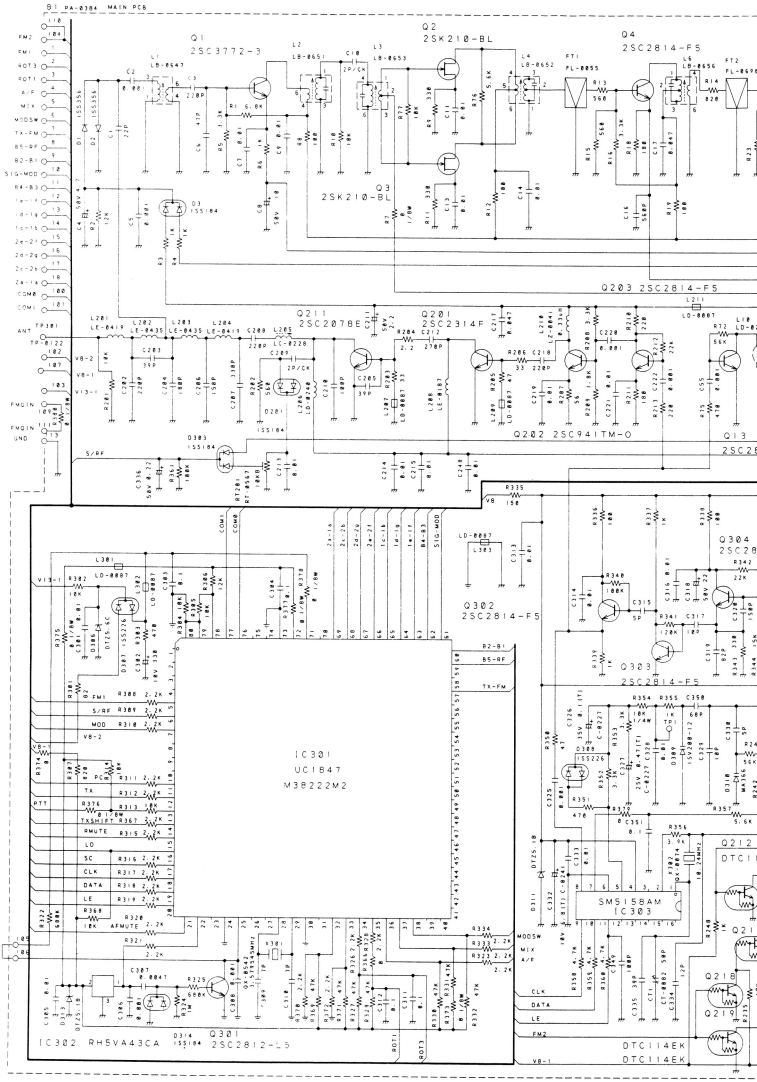
B1 PA-0384 MAIN PCB
Q1 2SC3772-3
Q2 2SK210-BL
Q3 2SK210-BL
Q4 2SC2814-F5
Q203 2SC2814-F5
Q211 2SC207BE
Q201 2SC2314F
Q202 2SC941TM-O
Q302 2SC2814-F5
Q303 2SC2814-F5
IC301 UC1847 M38222M2
IC302 RHSVA43CA
Q301 2SC2812-L5
IC303 SM5158AM
DTC114EK
DTC114EK
FM2
FMI
ROT3
ROT1
A/F
MIX
MODSW
TX-FM
B5-RF
B2-B1
SIG-MOD
B4-B3
1a-1b
1b-1c
1c-1d
2a-2f
2b-2g
2c-2h
2d-1a
COMB
COM1
ANT
FM1IN
FM2IN
GND
S/RF
V8-2
V8-1
V13-1
PCO
TX
RTT
TXSHIFT
RMUTE
LD
SC
CLK
DATA
LE
AFMUTE
MODSW
MIX
A/F
CLK
DATA
LE
FM2
V8-1

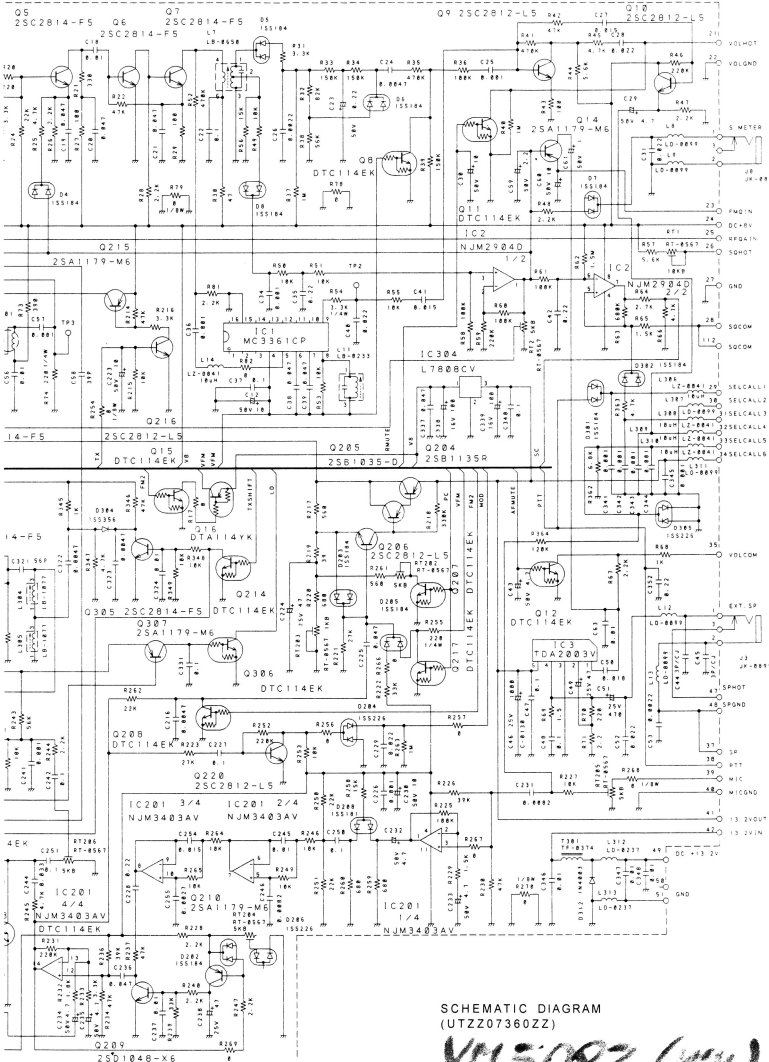

SCHEMATIC DIAGRAM
(UTZZ07360ZZ)

YM5082 (new)

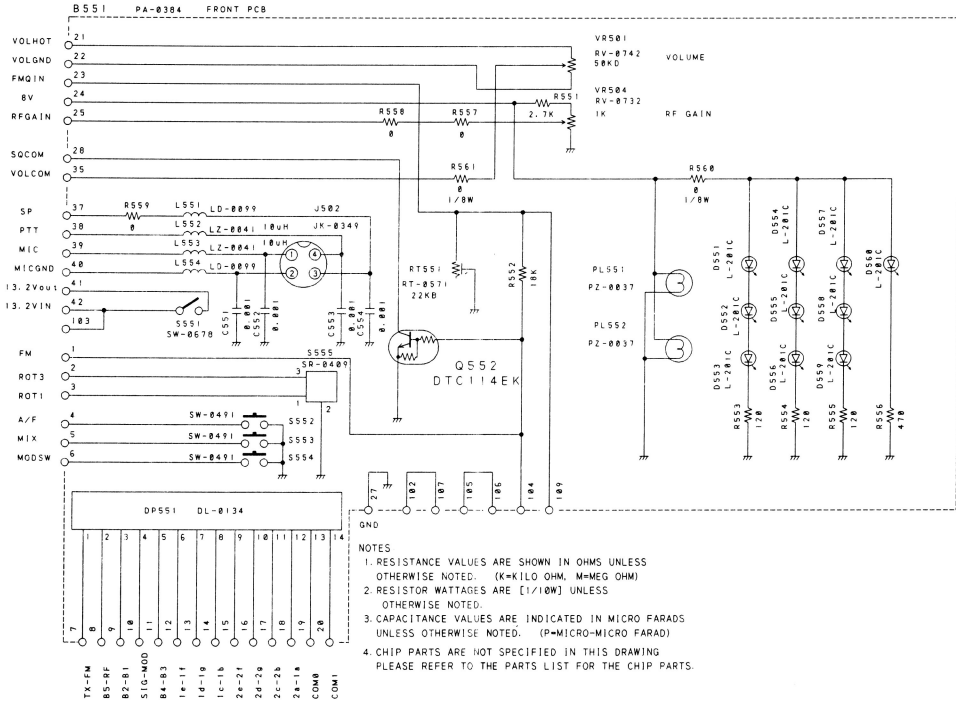

NOTES

1. RESISTANCE VALUES ARE SHOWN IN OHMS UNLESS OTHERWISE NOTED. (K=KILO OHM, M=MEG OHM)
2. RESISTOR WATTAGES ARE [1/10W] UNLESS OTHERWISE NOTED.
3. CAPACITANCE VALUES ARE INDICATED IN MICRO FARADS UNLESS OTHERWISE NOTED. (P=MICRO-MICRO FARAD)
4. CHIP PARTS ARE NOT SPECIFIED IN THIS DRAWING PLEASE REFER TO THE PARTS LIST FOR THE CHIP PARTS.

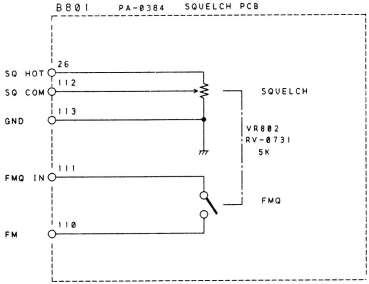
B801 PA-0384 SQUELCH PCB
26
SQ HOT
112
SQ COM
113
GND
111
FMQ IN
110
FM
SQUELCH
VR802
RV-0731
5K
FMQ

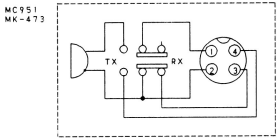
MC951
MK-473
TX
RX
1
2
3
4