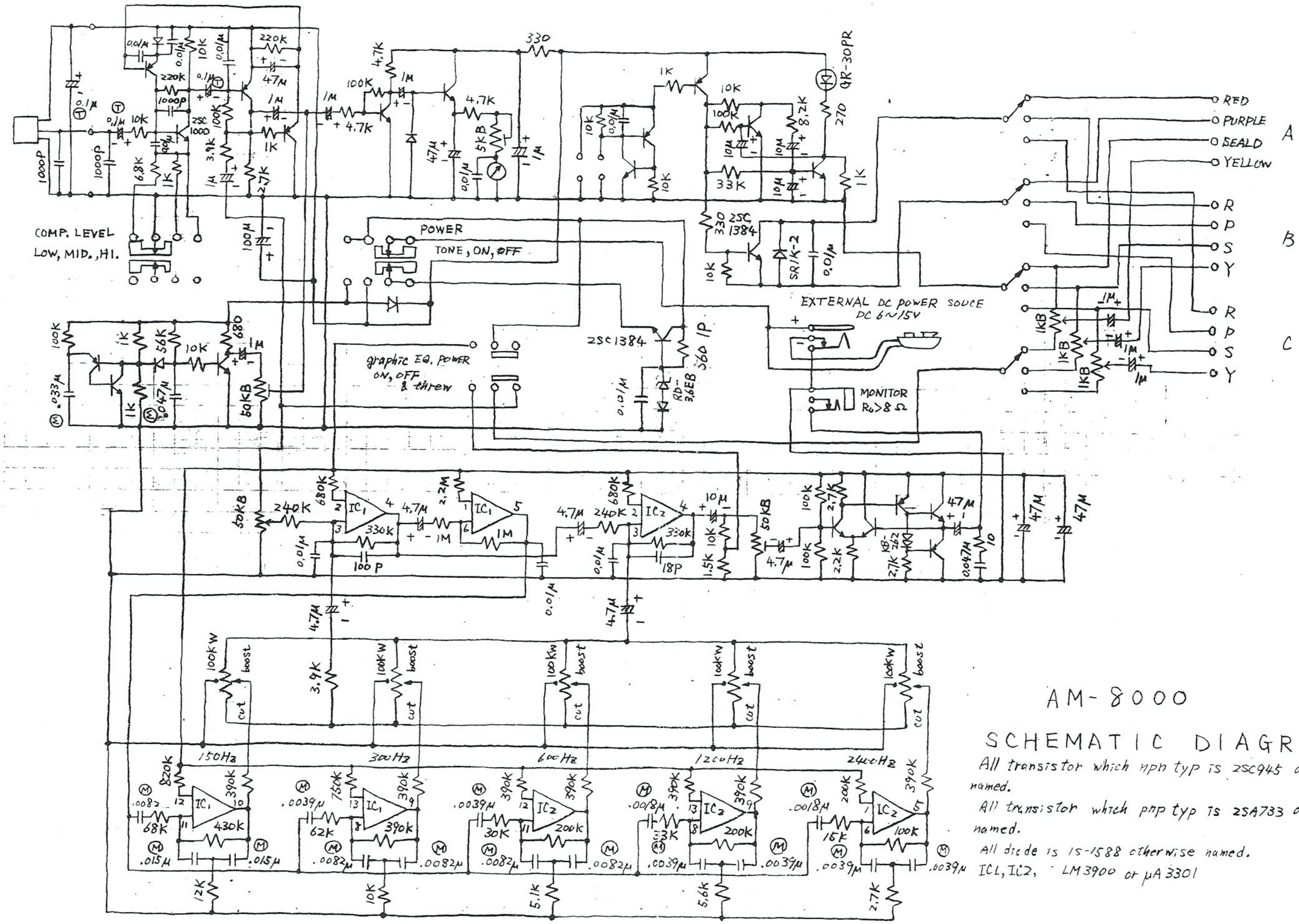

AM-8000

SCHEMATIC DIAGRAM

All transistor which npn typ is 2SC945 othrwise named.

All transistor which pnp typ is 2SA733 otherwise named.

All diode is 1S-1588 otherwise named.

IC1, IC2, LM3900 or μA3301