SCHEMATIC DIAGRAM President PC 40 /AM/FM 40/12

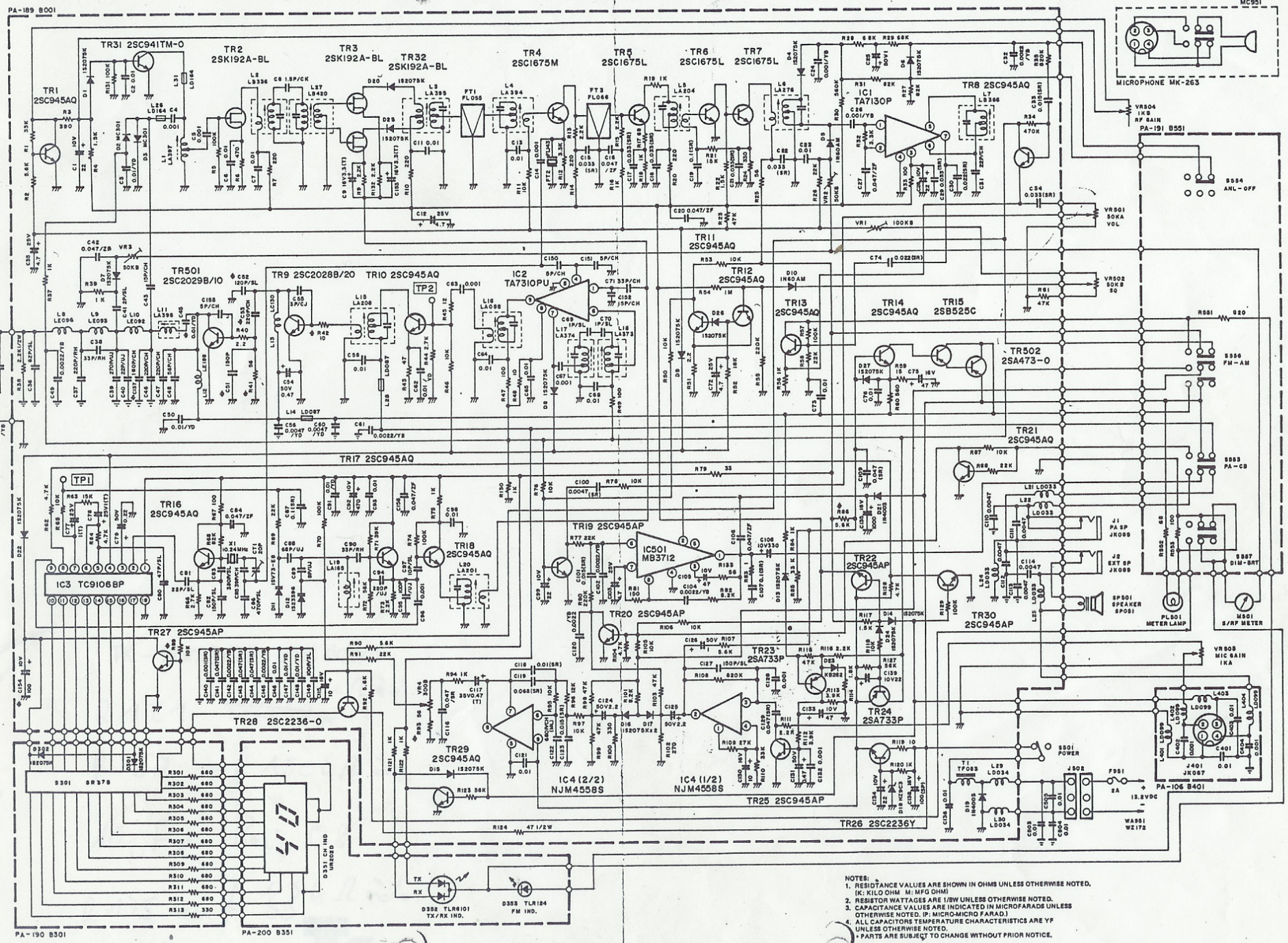

NOTES:
1. RESISTANCE VALUES ARE SHOWN IN OHMS UNLESS OTHERWISE NOTED. (K: KILO OHM M: MEG OHM)
2. RESISTOR WATTAGES ARE 1/8W UNLESS OTHERWISE NOTED.
3. CAPACITANCE VALUES ARE INDICATED IN MICROFARADS UNLESS OTHERWISE NOTED. (P: MICRO-MICRO FARAD.)
4. ALL CAPACITORS TEMPERATURE CHARACTERISTICS ARE YF UNLESS OTHERWISE NOTED.
• PARTS ARE SUBJECT TO CHANGE WITHOUT PRIOR NOTICE.

UTUE07302ZZ

Printed in Taiwan R.O.C.