AE 6890 Channel and Power modification

240 Channel enable (for Russia only)
Add jumper at section B at detachable front section board

To open: take off front section, remove 4 screws

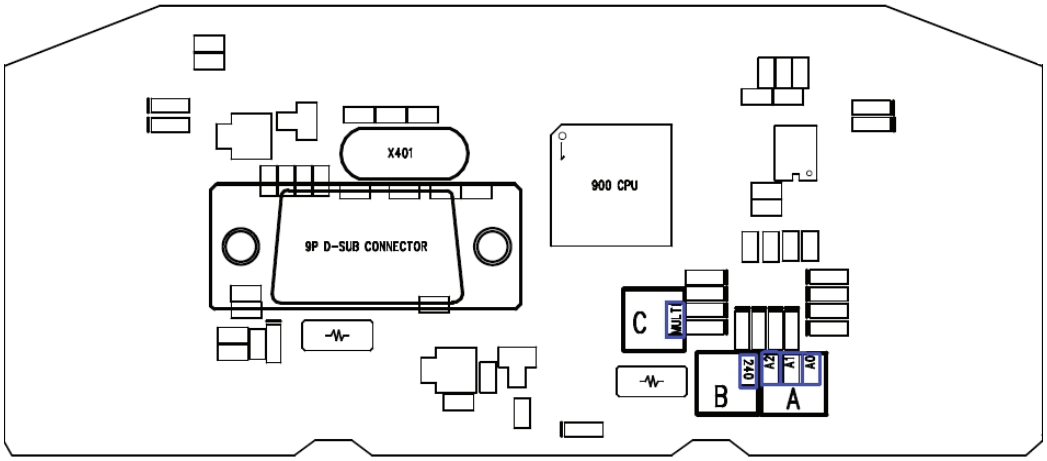

Enable 240CH by adding 0 OHM or solder jumper.
Default setting: no jumper, 240 CH is not allowed

Operation:

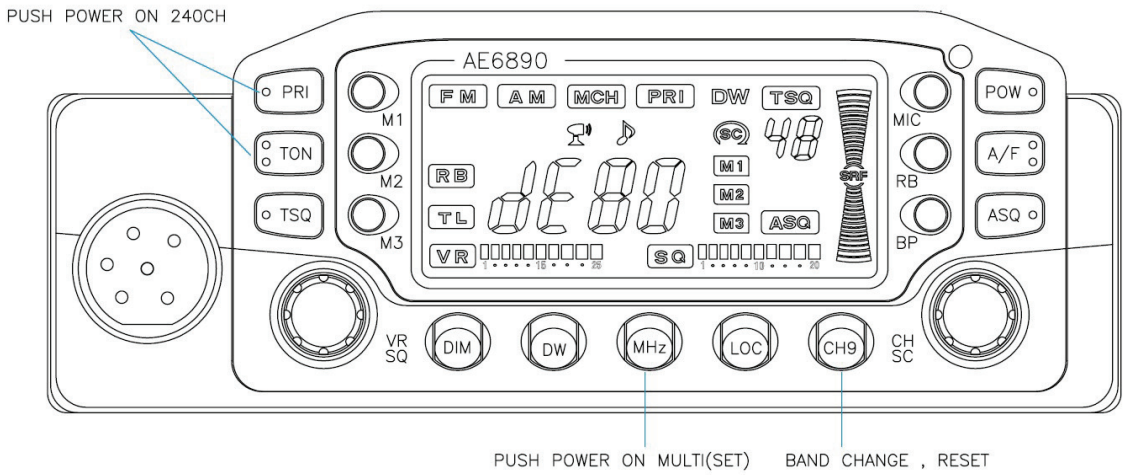

- Keep buttons PRI and TON pressed during switch on
- Release Power knob
- Relase PRI and TON
- Select bands A to F by CH 9 knob

Reset to Multi standard version:

- Keep button CH 9 pressed during power on
- Reset appears on display for a moment, the normal operation starts

Power options (for use in Russia only)

Open main radio cabinet. Install solder jumpers or 0 Ohms resistors.
Possible modifications (1) and (2) ***or*** (3)

(1) highest possible AM power max. 6-8 W eff
(2) highest possible FM power max. 8-10 W
(3) set AM power from 1 W to 4 Watts

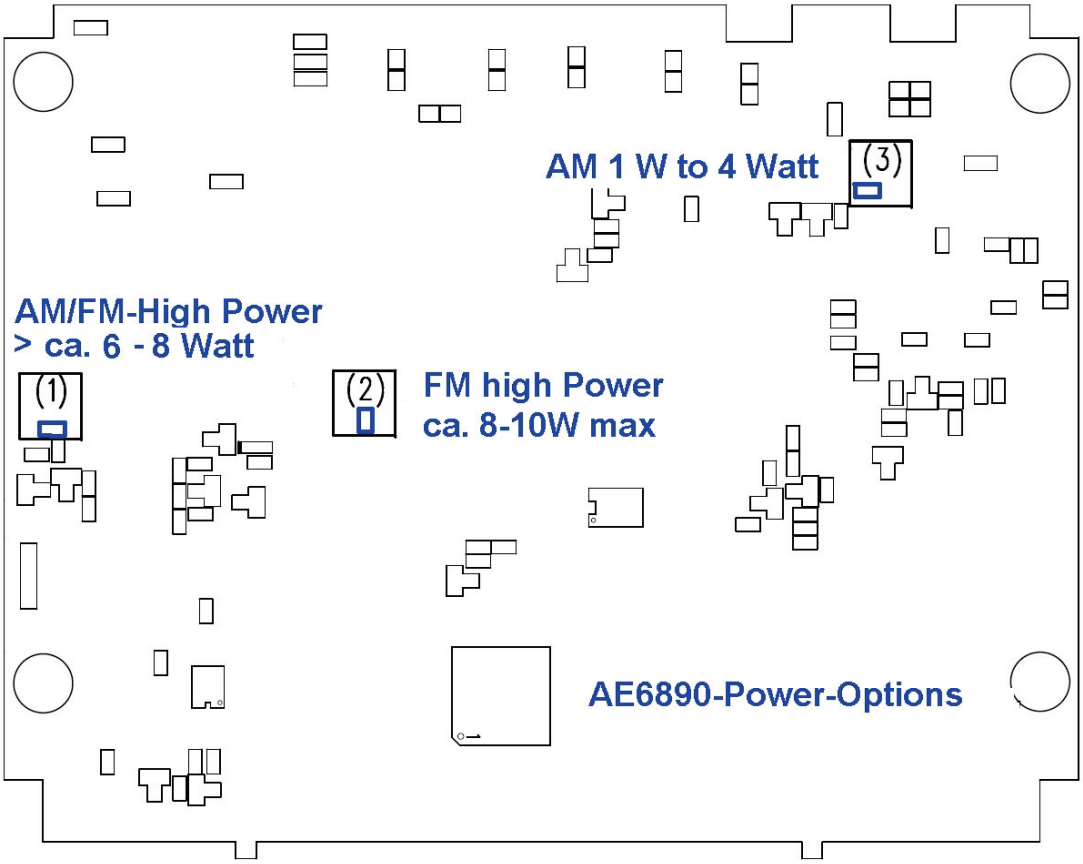
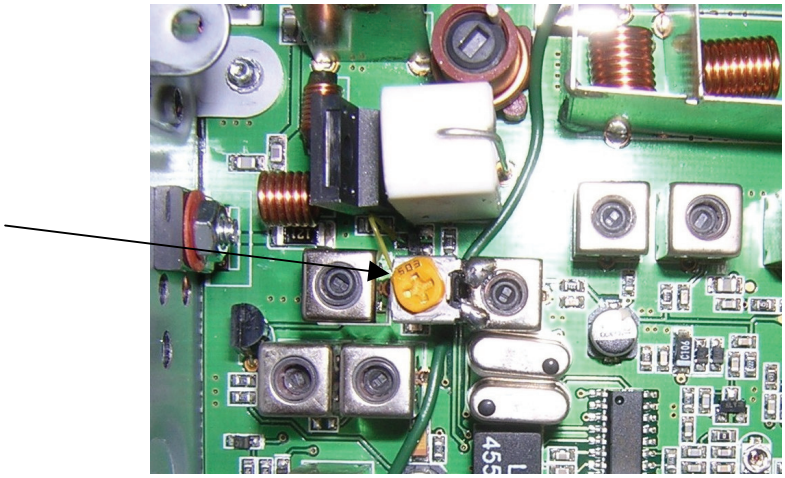
Note: instead of jumper (3) the **AM power in 1 Watt position** can be fine adjusted by potentiometer between about 700 mW and 4 Watt eff.