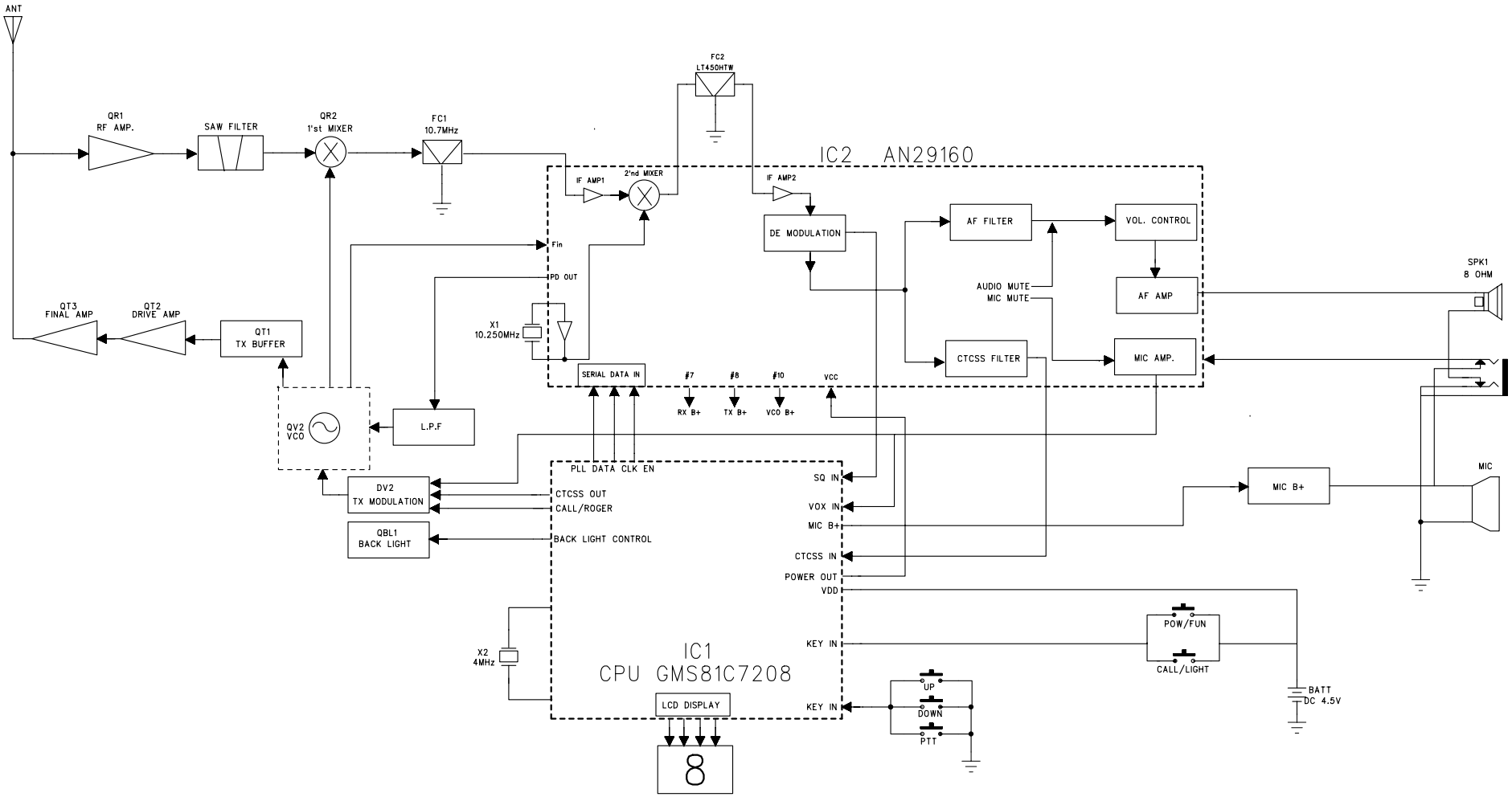ALAN K1 BLOCK DIAGRAM