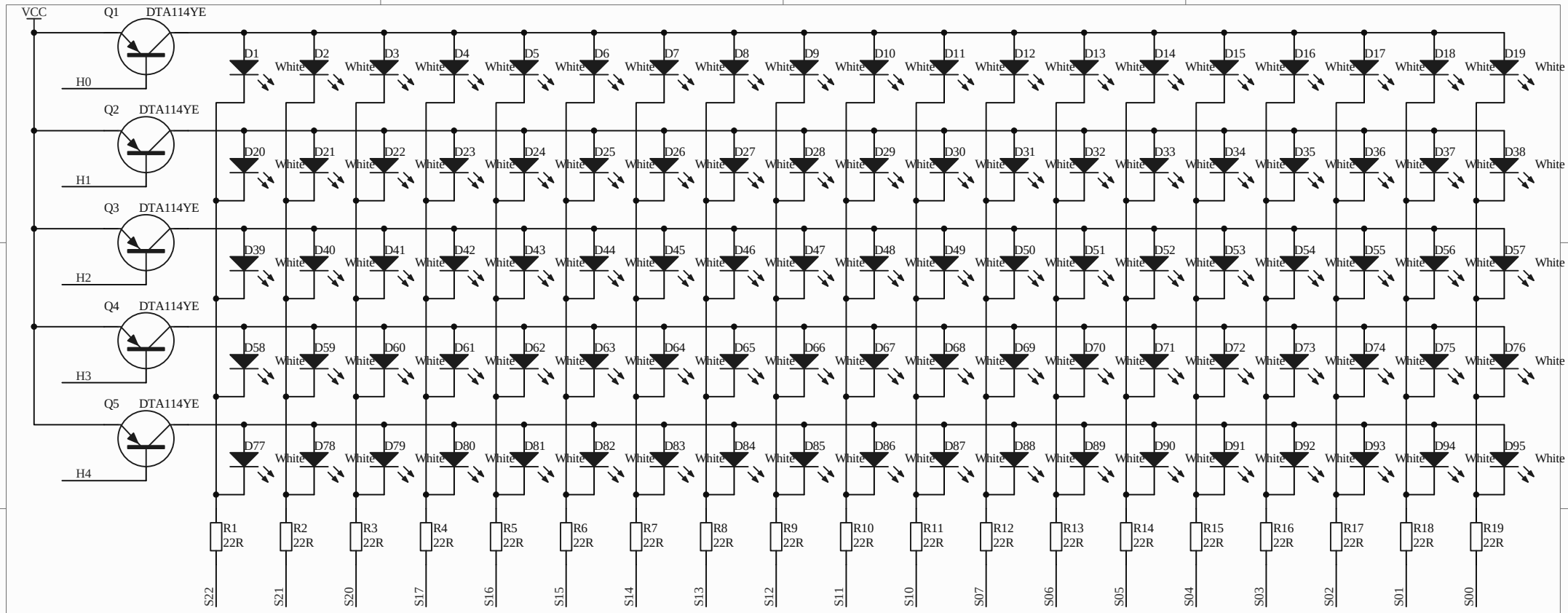

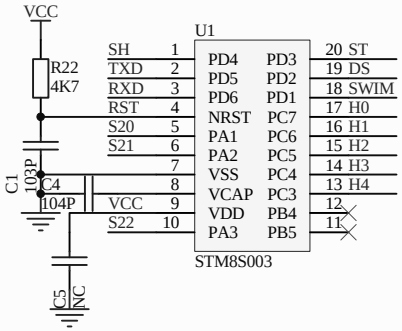

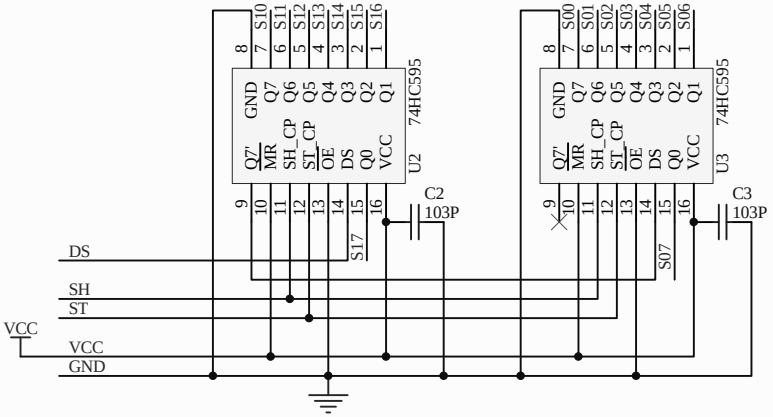

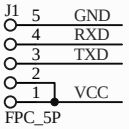

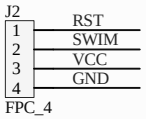

Title		
Size A4	Number	Revision
Date: 2017-2-10	Sheet of	
File: C:\Documents and Settings\..\3600377P40100.SCHDOC	Drawn By:	