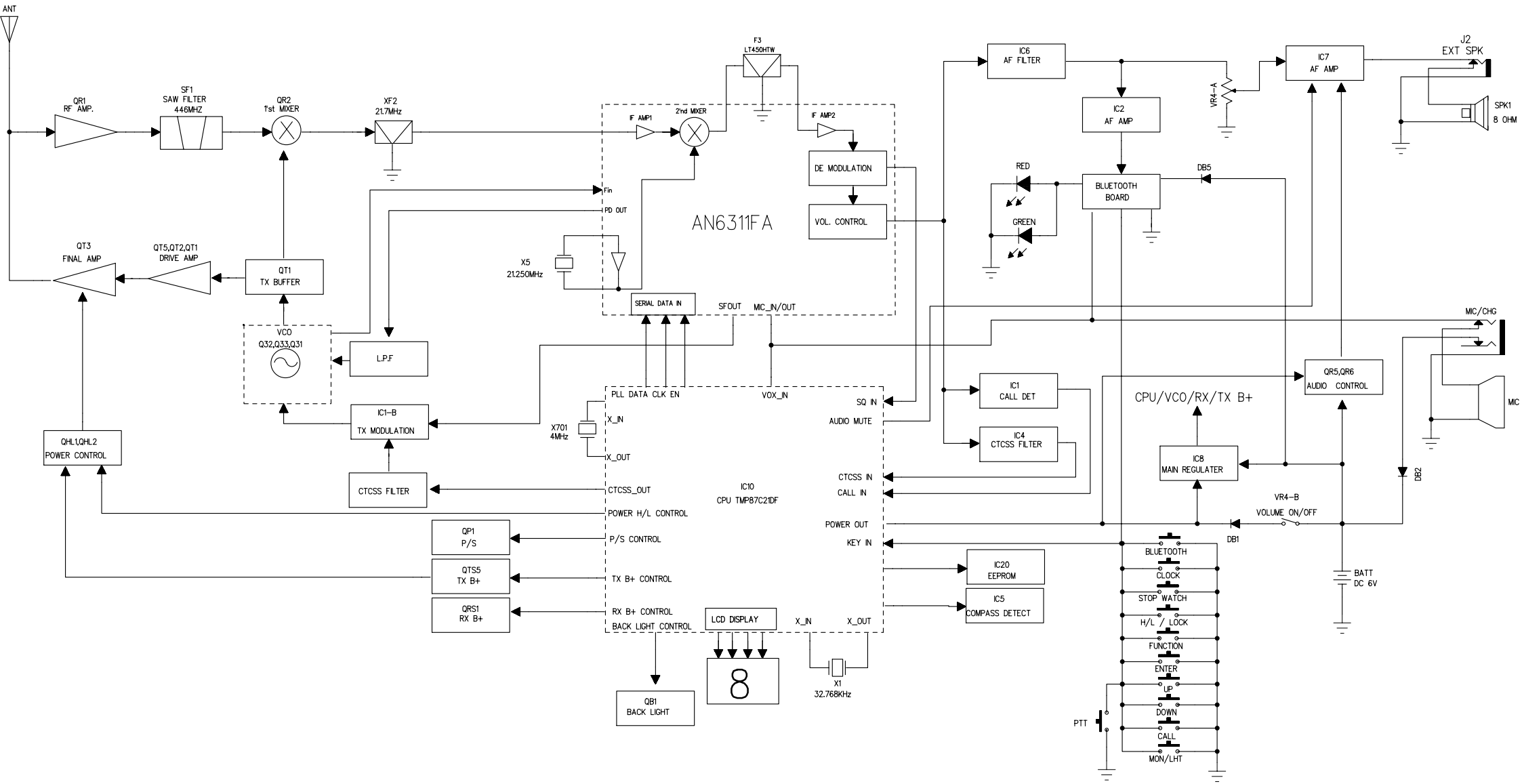ALAN-445 SPORT BT BLOCK DIAGRAM