Galaxy DX Radios DX2517

Documentation Project

CBTricks.com

Alignment Locations

PLL Alignment

Transmitter Alignment

Receiver Alignment

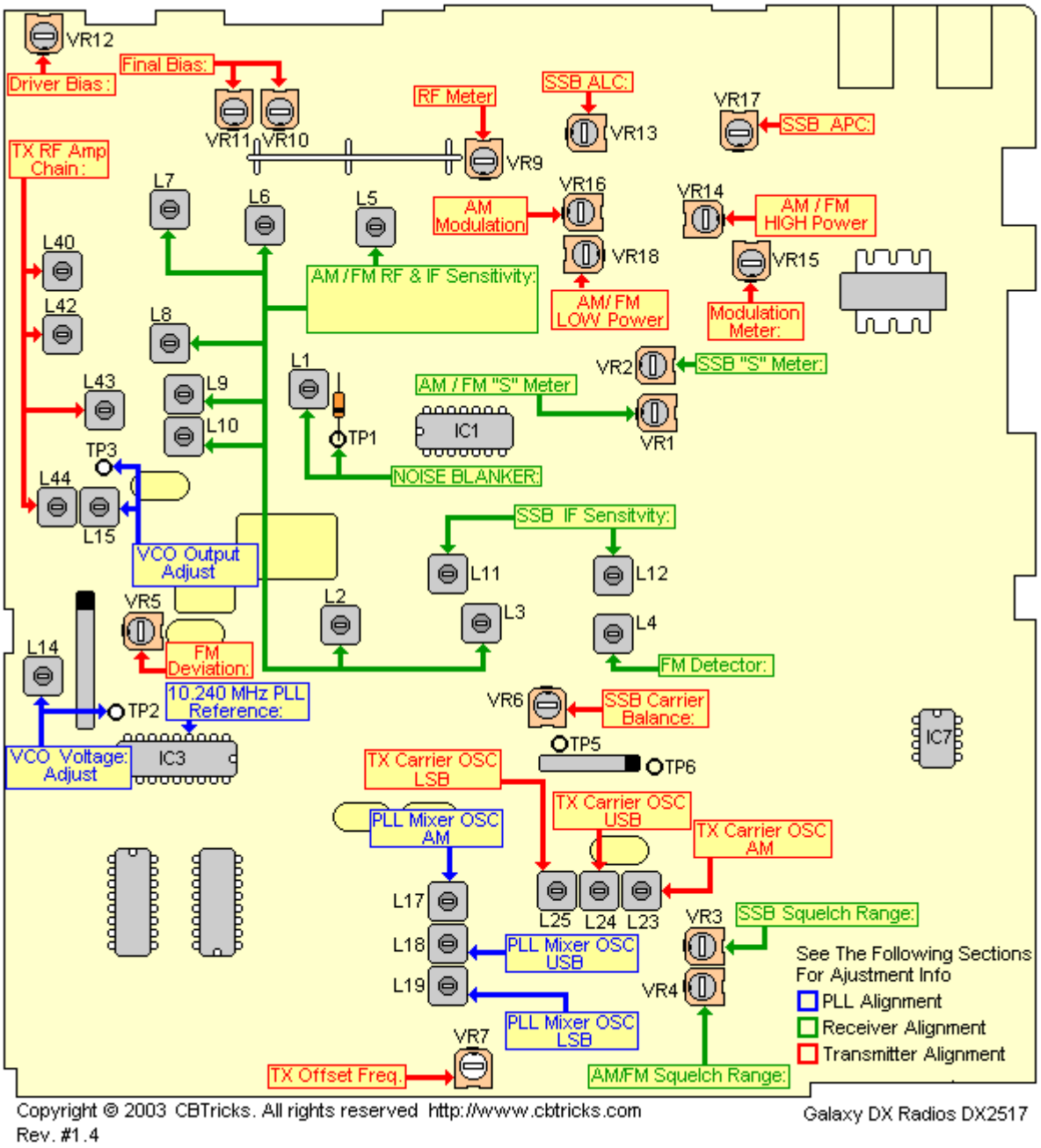

Copyright © 1998,1999,2000 CBTricks.com
Disclaimer: Although the greatest care has been taken while compiling these documents, we cannot guarantee that the instructions will work on every radio presented.