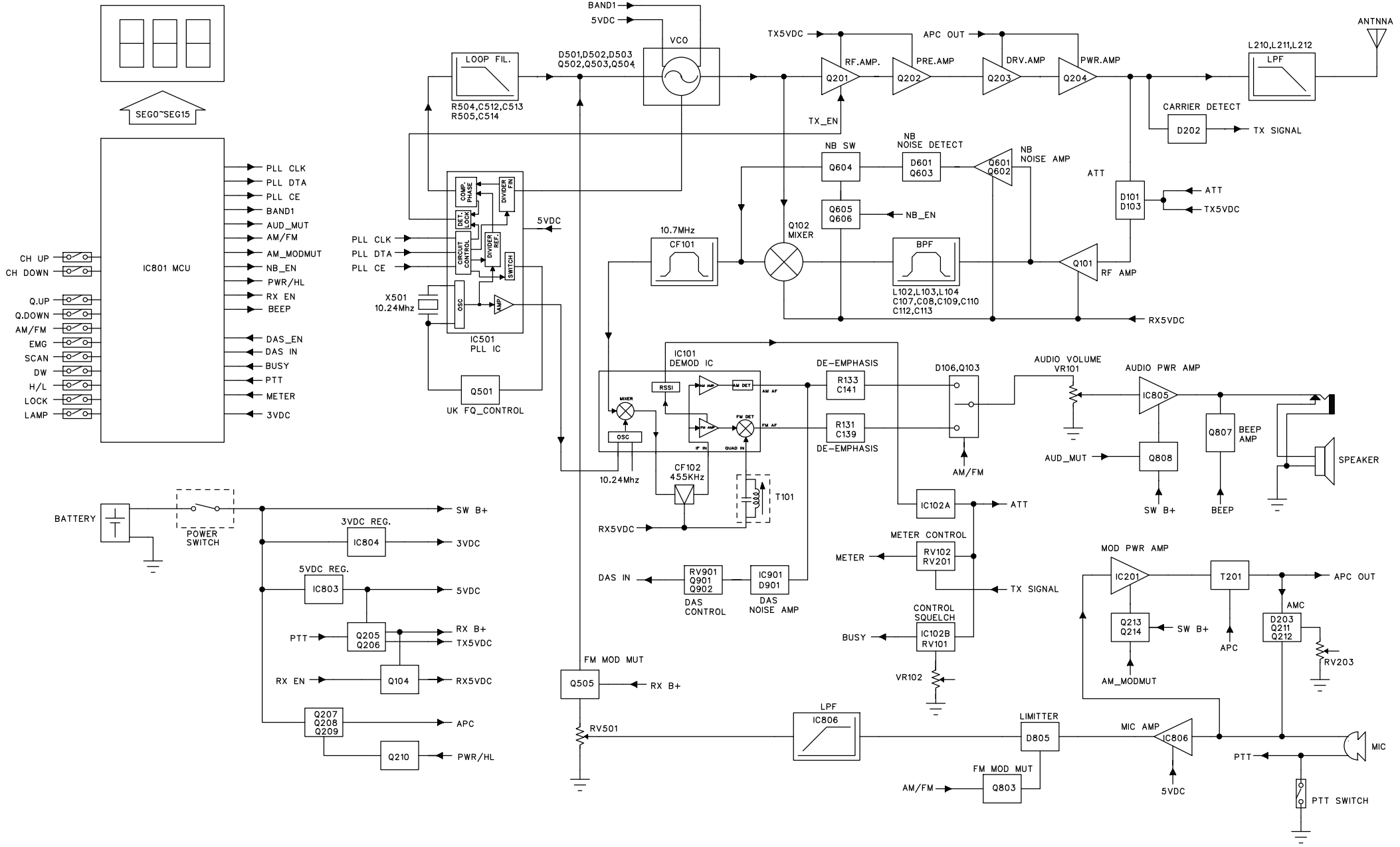

DRAWING	CHECK	APPROVAL	TITLE	CB RADIO
			MODEL NAME	ALAN-42 DS
J.S.KIM	J.S.KIM		MODEL CODE	
			DRAWING NO.	