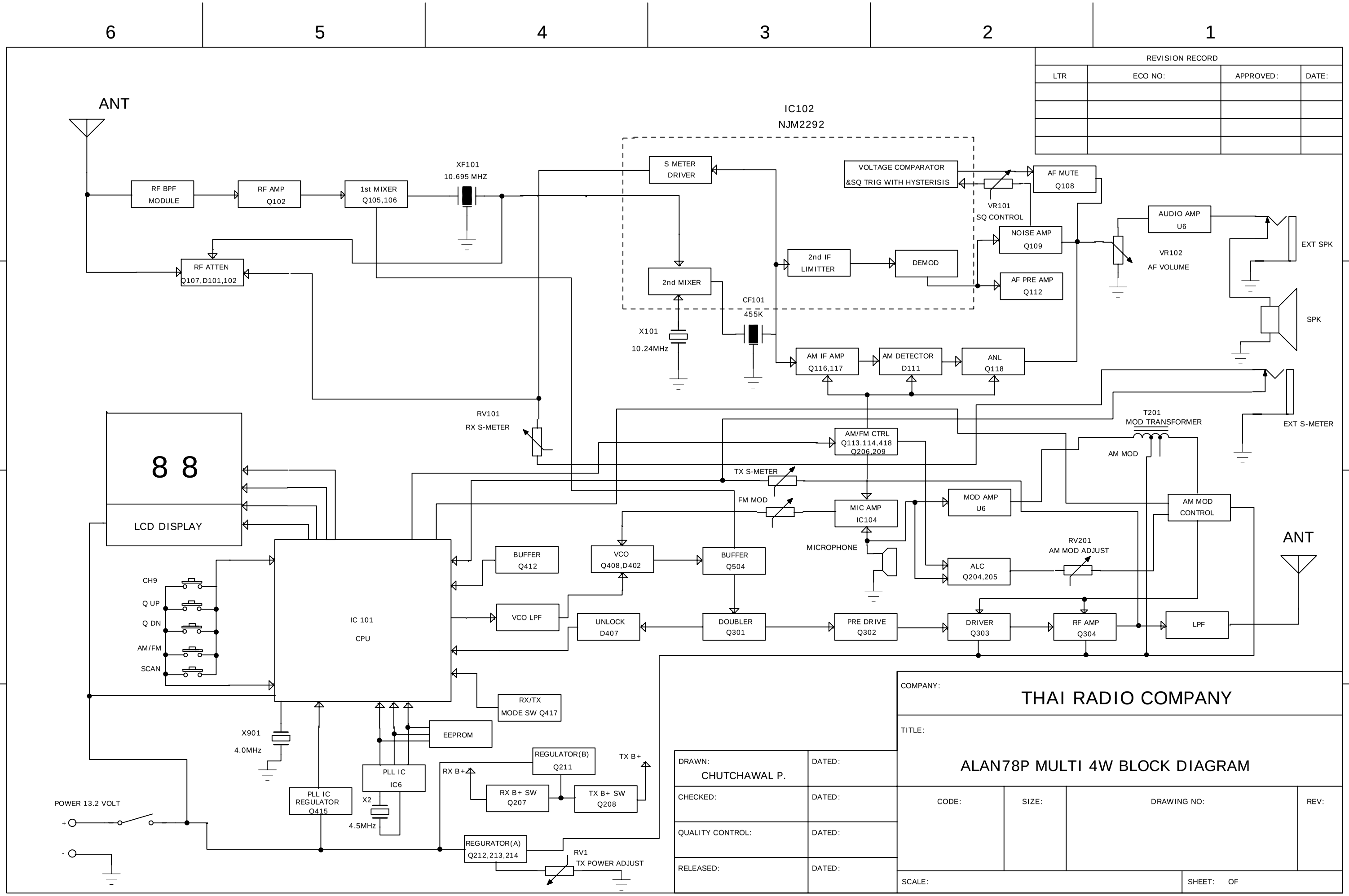

REVISION RECORD			
LTR	ECO NO:	APPROVED:	DATE:

DRAWN: CHUTCHAWAL P.	DATED:
CHECKED:	DATED:
QUALITY CONTROL:	DATED:
RELEASED:	DATED:

COMPANY: THAI RADIO COMPANY

TITLE: ALAN78P MULTI 4W BLOCK DIAGRAM

CODE:	SIZE:	DRAWING NO:	REV:

SCALE: SHEET: OF