CIRCUIT DESCRIPTION

FREQUENCY CONFIGURATION

The frequency configuration is shown in Figure 1

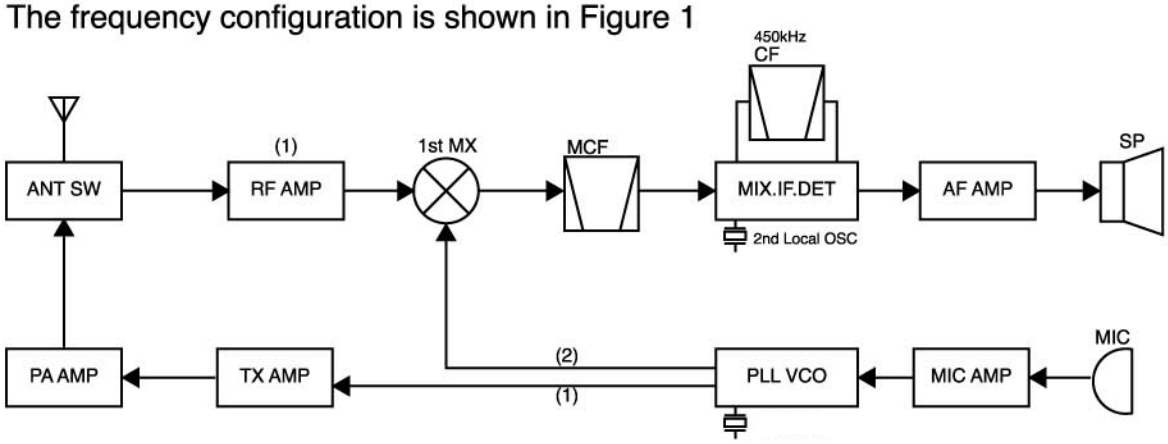

Fig.1

RECEIVER SYSTEM

RF amplifier

The signal from the antenna is passed through a low-pass filter andthe transmission/reception selector circuit D211,D212 input to the RF amplifier. The input signal is amplifier by T231. The unwanted frequency band of the signal is then eliminated by a band-pass filter.

First-stage mixer

The input signal is mixed with the first local oscillator signal from the PLL circuit by the first-stage mixer T251,producing a first IF signal. The unwanted frequency band of the first IF signal is eliminated by a crystal filters.

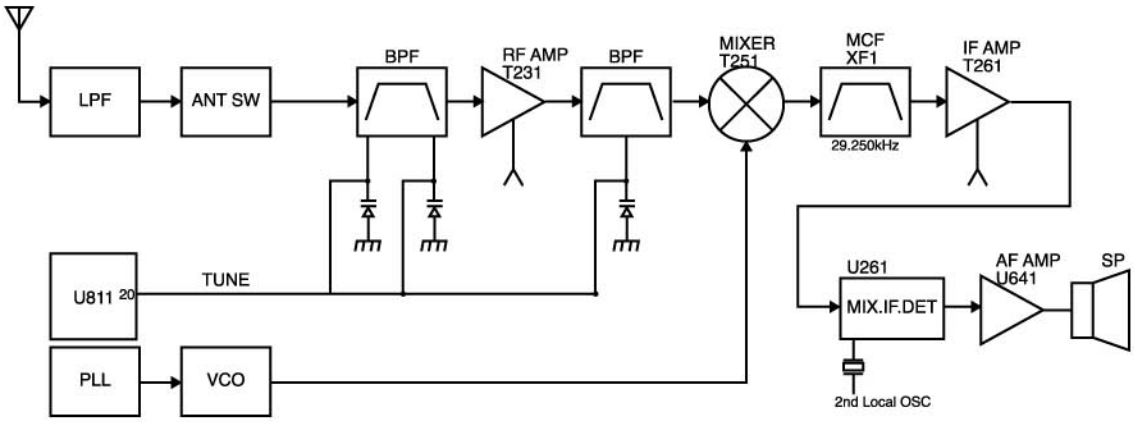

Fig.2

IF amplifier

The first IF signal is amplified by T261 and enters U261(FM signal processing IC), where it is mixed with the second local oscillator signal and so converted into the second IF signal. The unwanted frequency band of the second IF signal is eliminated by ceramic filter FL261. The resulting signal is then amplified and detected.

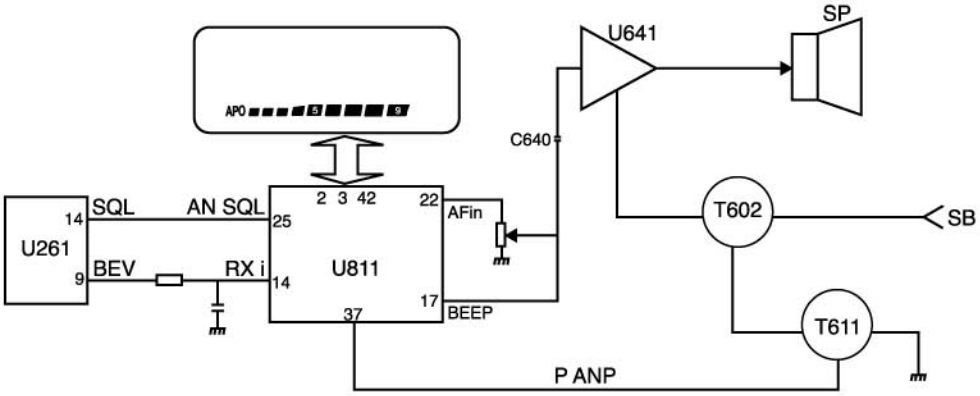

Fig.3

AF amplifier

The audio signal output by the FM detector are corrected by the high-pass filter and de-emphasize circuit. The audio signal is then passed through and AF variable resistor and amplified by power amplifier U641 to obtain the desired output.

Squelch and mute circuits

The output detected by U261 is input to MCU(pin 25), the voltage input to the microprocessor is digitized, and the microprocessor controls the MUTE.,RXI, RXO, thus controlling the audio signal. The microprocessor control this system from level 1-9, it can be programmable by software or keypad.

S meter

The S-meter signal is output from U261 as a direct voltage corresponding to the input signal, converted to a voltage by R278, then input to the microprocessor. The DC voltage is digitized to control the LCD S-meter display.

TRANSMITTING SYSTEM

Microphone amplifier

The audio band of the signal from the microphone is corrected by preem-phasis circuit The signal is amplified and limited by U411B(1/2). Distortion comp-onents exceeding the audio band of the resulting signal are then eliminated by a splatter filter consisting of U411A(2/2). Then input to Pin 15 of the microprocessor, VOX input to Pin 22 of the microprocessor.

Modulation circuit

The signal from the microphone amplifier passes through the modulation adjustment variable resister VR378, is applied to VCO varicap diode D333, and modulated by variable reactance.

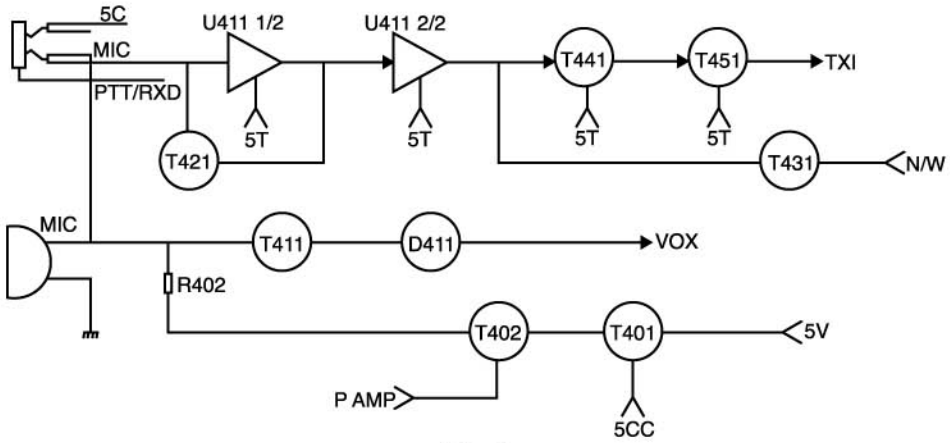

Fig.4

Drive and Final Circuit

The desired signal is produced by the VCO, and amplified by T111. It is then amplified by T121. The amplified signal is input to a two-stage FET amplifier, and increases the power to about 5W/4W.

Transmission/reception selector circuit

The transmission output is passed through the transmission/reception selectorcircuit and low-pass filter to the antenna. The transmission/reception selector circuit,which consists of D156,D211 and D212, is turned on during transmission and offduring reception to switch the signal.

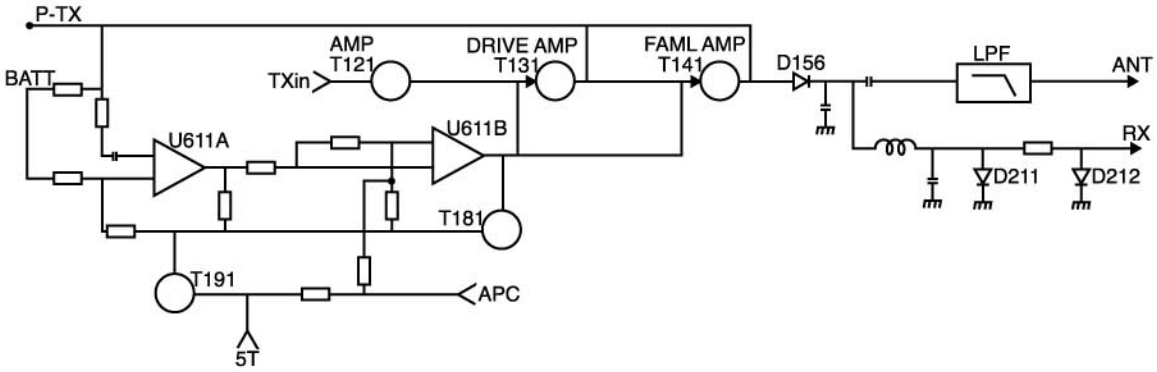

Fig.5

APC and transmission output selector circuits

The automatic power control(APC) circuit is used to obtain a stable transmission current. This circuit detects the drain current in the final stage of the power module and controls the transmission output. For U161, two voltages are applied: one is the reference voltage for transmission output adjustment, another is the detection voltage generated across R171,R173 in proportion to the drain voltage in the final stage. The voltage, proportional to the difference between the reference voltage and the detection voltage, is obtained at the output of U161. This voltage is reversed by T181 to provide the APC voltage. This APC voltage controls the power control pin of the power module and stabilizes the transmission output.

PLL CIRCUIT

PLL

The output from the 14.4Mhz reference oscillator is divided by U377 to produce a 5 kHz or 6.25Khz reference frequency. The comparison frequency is obtained by amplifying the VCO output by T331 and dividing it by the U311. 5,10, 12.5,20, and 25Khz PLL synthesizer is implemented by phase-comparing the reference frequency and comparison frequency obtained when CR311 is divided. The pulse output from Pin 5 of U311 according to the difference between the reference frequency and the comparison frequency is passed through the charge pump. And is removed the ripple by a low-pass filter to produce the lock voltage.

VCO

The desired frequency is directly produced by the Colpitts oscillator configured around FET,T331, and 351. The lock voltage is applied to D331, D332, D351 and D352 to change the oscillator frequency.

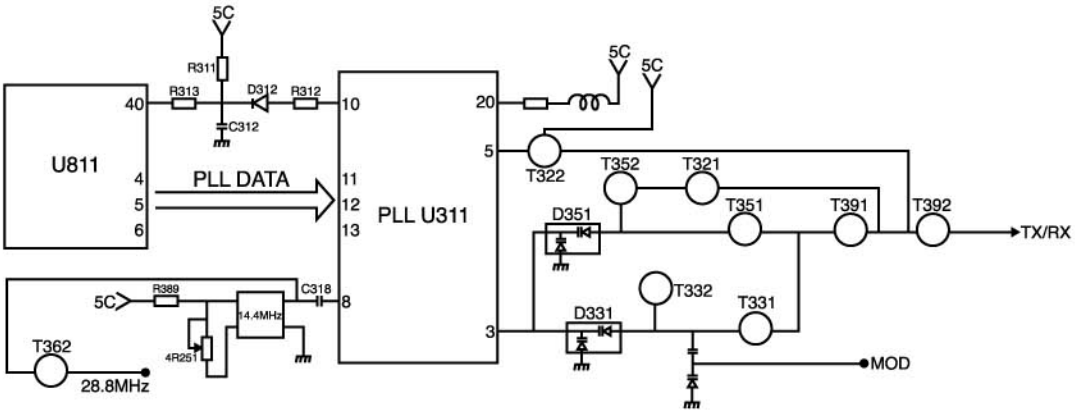

Fig.6

Unlock detection circuit

When the PLL is in the unlock state, the pulse that is output to the LD pin (pin 10) of PLL is waveform shaped by R312,D312,C312 and R313. The LD pin is then made high. The voltage at the LD pin is monitored by the microprocessor to control the transmission or reception selection timing.

DIGITAL CONTROL CIRCUIT

Keys and rotary encoder circuit

The signal from keys and rotary encoder input to microprocessor directly

Reset and backup circuits

When the SB is turned on, a high-level pulse is output from the reset circuit consisting of T881,C883, and R883 to reset microprocessor U881(Pin 32). If SB is turned off, U517 detects a 5V voltage drop, and outputs a low signal. When the microprocessor port goes low, it outputs data to U821 and enters backup mode.

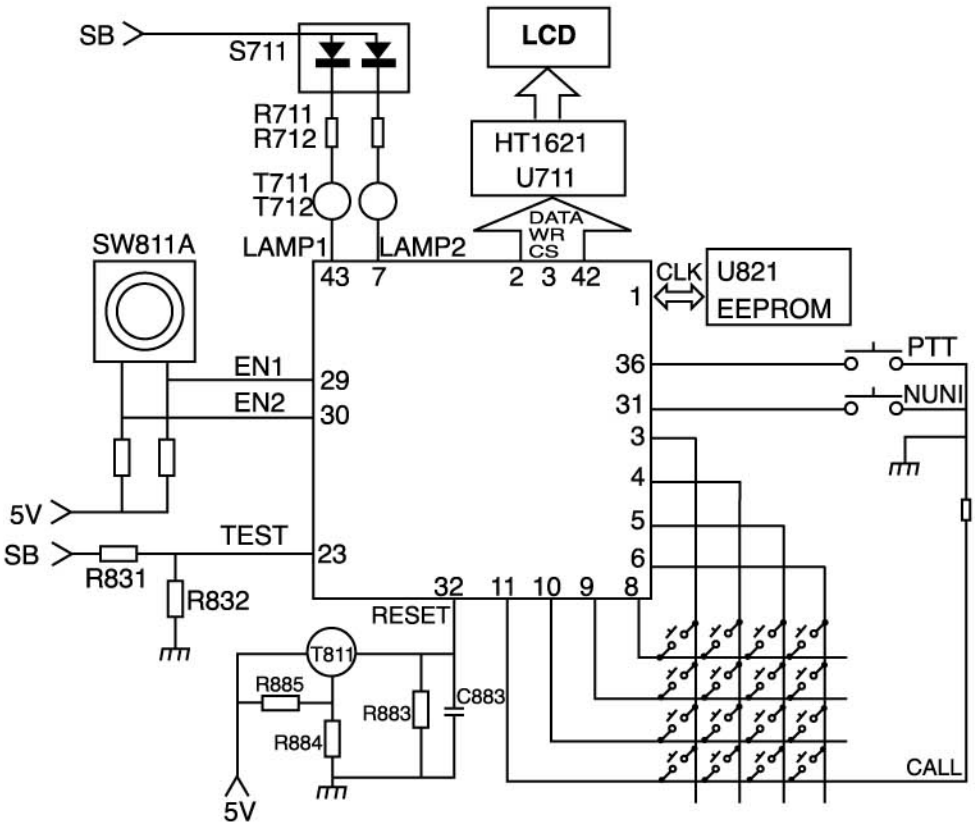

Fig.7

Battery voltage detector circuit

The supply voltage(SB) is divided and input to the analog port(Pin23) of the microprocessor. The voltage input to the microprocessor during transmission is digitized to drive the LCD battery display.

Lamp&LCD circuit

The LCD is turned on or off by directly flowing current to the microprocessor ports.

Battery save circuit

The squelch is switched in during receive. The power circuit enters battery save mode if no key has bean pressed for five seconds. This circuit is controlled by microprocessor.

CTCSS/DCS circuit

The sub-tone signal is produced by the serial data from Pin17(CTCSS) or Pin44(DCS) of microprocessor. When the sub-tone is transmitted, the CTCSS /DCS is output from the microprocessor and modulated, after through LPF. The audio signal detected output to the decoder of microprocessor. The DEV pin is made low when the tone frequency coincides. The microprocessor determines the DEV pin state.

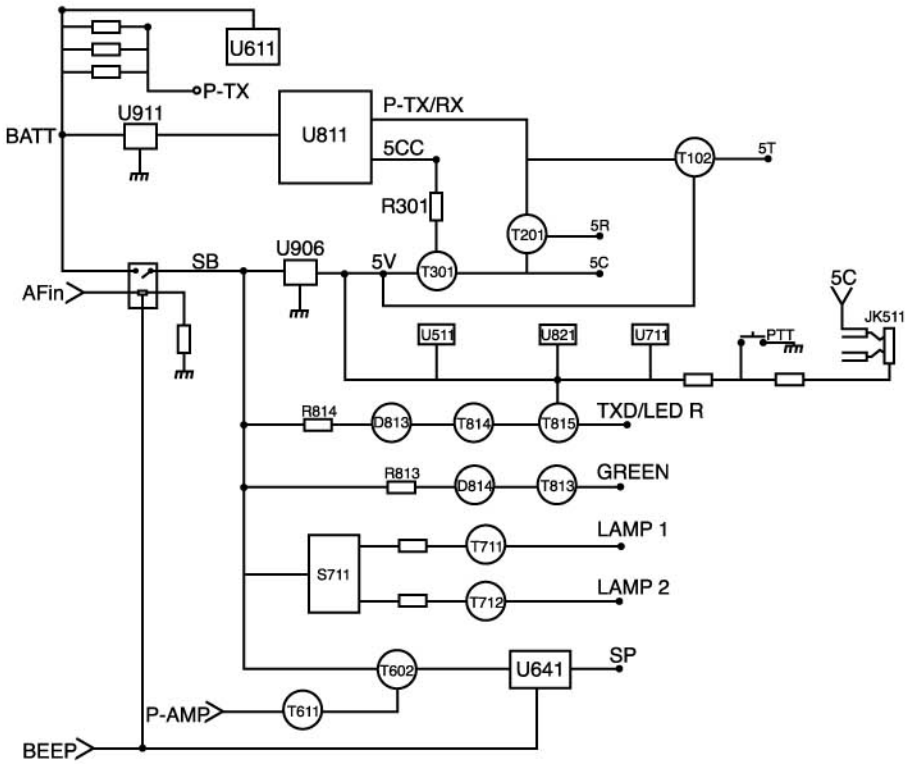

Fig.8

POWER SELECTOR CIRCUIT

The power circuit configuration is shown in Figure 8. The power circuit branches are as follows:

- BATT
  - RB — Power amplifier power supply voltage
  - 5M — Output 5M by U911 stabilized voltage circuit, microprocessor U811, Vdd, Avdd, 5CC control output by Pin38 of U811, VOX control voltage.
    5CC control 5V,output 5C reference voltage supply to VCO, Vdd and CR311,PLL,U311,Vdd.
  - SB
    - S711 Vdd
    - ASB — AF amplifier U641,Vdd.
    - Output 5V by U906 stabilized voltage circuit, P-TX/RX control transfer of Transmission/reception circuit.
      P-TX/RX control 5C,output 5R supply to receive stage voltage U261 Vdd, T261, T251, T231.
    - 5V — 5V output 5T supply to Transmission stage voltage.
      U511 Vdd, U821 Vdd, and U711 Vdd.
    - 5T — Transmission U411 switch, amplify and drive Vdd, protection circuit bias voltage, D156, D211, D212 switch (transmission/reception transfer switch)

SCRAMBLER

Audio signal is amplified and enters U512(Pin 6), there is a audio signal in Pin 5, IC 128 disturb this audio signal and output from Pin 4 to MOD. When receiver obtained the signal and output from U911(Pin 22) to open the audio switch of U512(Pin12), the disturb audio signal which input to Pin 11 was corrected by IC 128 to a normal audio signal.

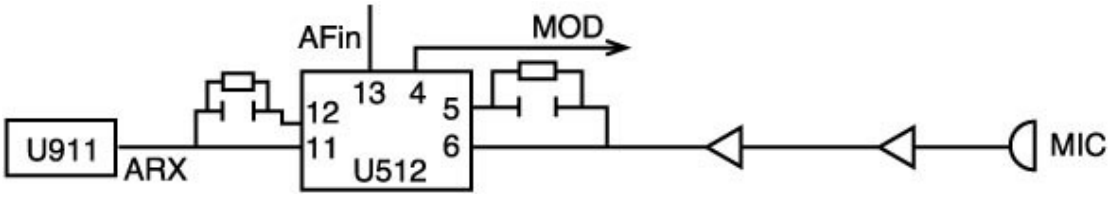

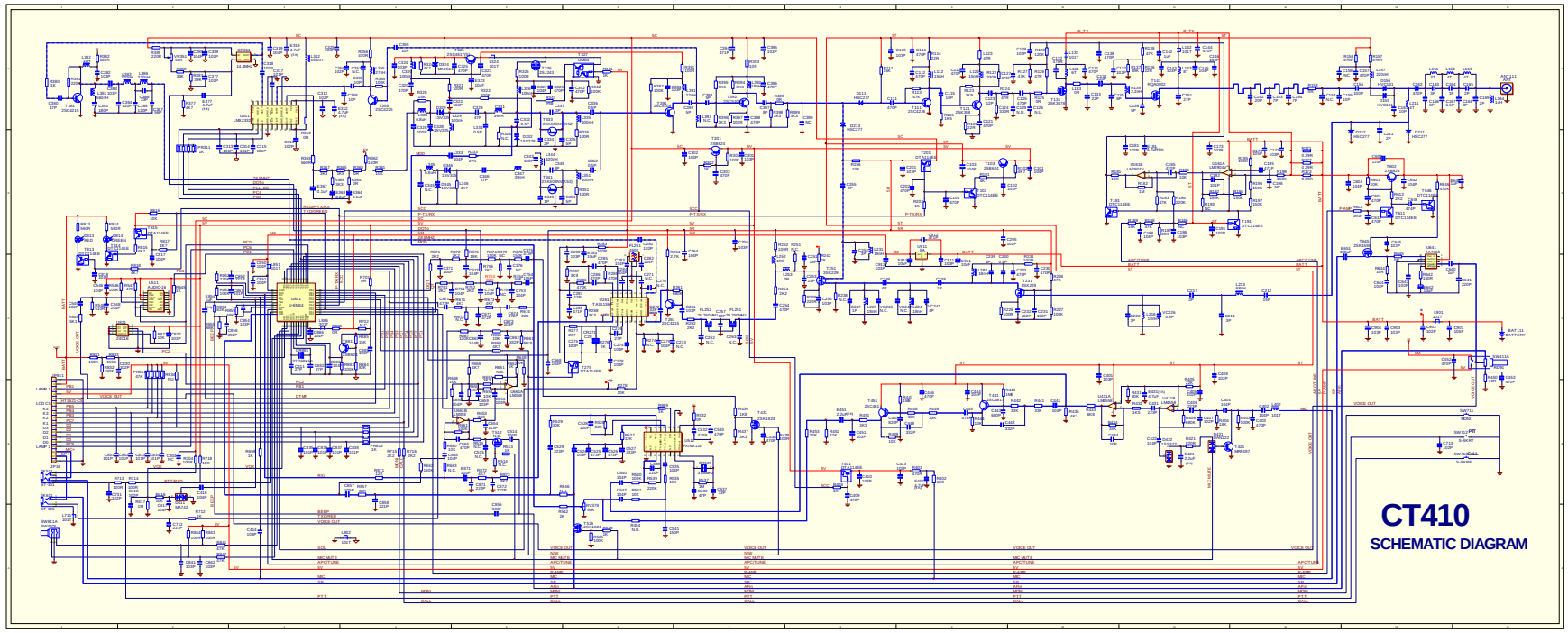
CT410
SCHEMATIC DIAGRAM

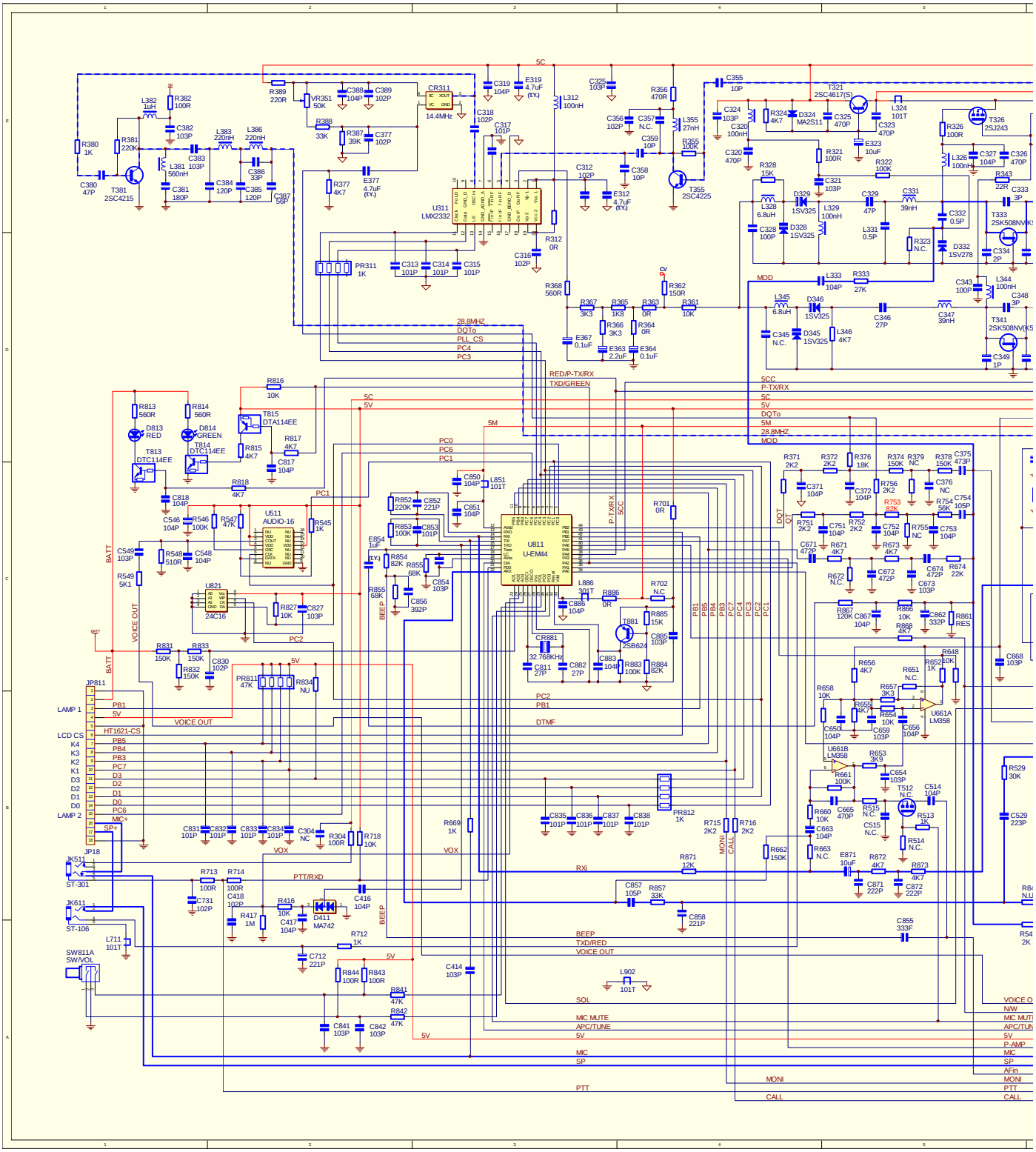
5C
28.8MHZ
DQTo
PLL_CS
PC4
PC3
RED/P-TX/RX
TXD/GREEN
P-TX/RX
5CC
5V
5M
MOD
PC0
PC6
PC1
PC2
PB1
DTMF
VOICE OUT
VOX
PTT/RXD
BEEP
TXD/RED
SQL
MIC MUTE
APC/TUNE
MIC
SP
PTT
CALL
MONI
RXi
BATT
LAMP 1
LCD CS
K4
K3
K2
K1
D3
D2
D1
D0
LAMP 2
MIC+
SP+
HT1621-CS
U811
U-EM44
U511
AUDIO-16
U661A
LM358
U661B
LM358
T321
2SC4617(S)
T326
2SJ243
T333
2SK508NV(K5
T341
2SK508NV(K5
T355
2SC4225
T381
2SC4215
T815
DTA114EE
T813
DTC114EE
T814
DTC114EE
D813
RED
D814
GREEN
U311
LMX2332
CR311
14.4MHz
CR881
32.768KHz
T881
2SB624
U821
24C16
JP811
JP18
JK511
ST-301
JK611
ST-106
SW811A
SW/VOL
PR311
1K
PR811
47K
PR812
1K
D411
MA742
D324
MA2S11
D345
1SV325
D346
1SV325
D328
1SV325
D329
1SV325
D332
1SV278
L902
101T
L711
101T

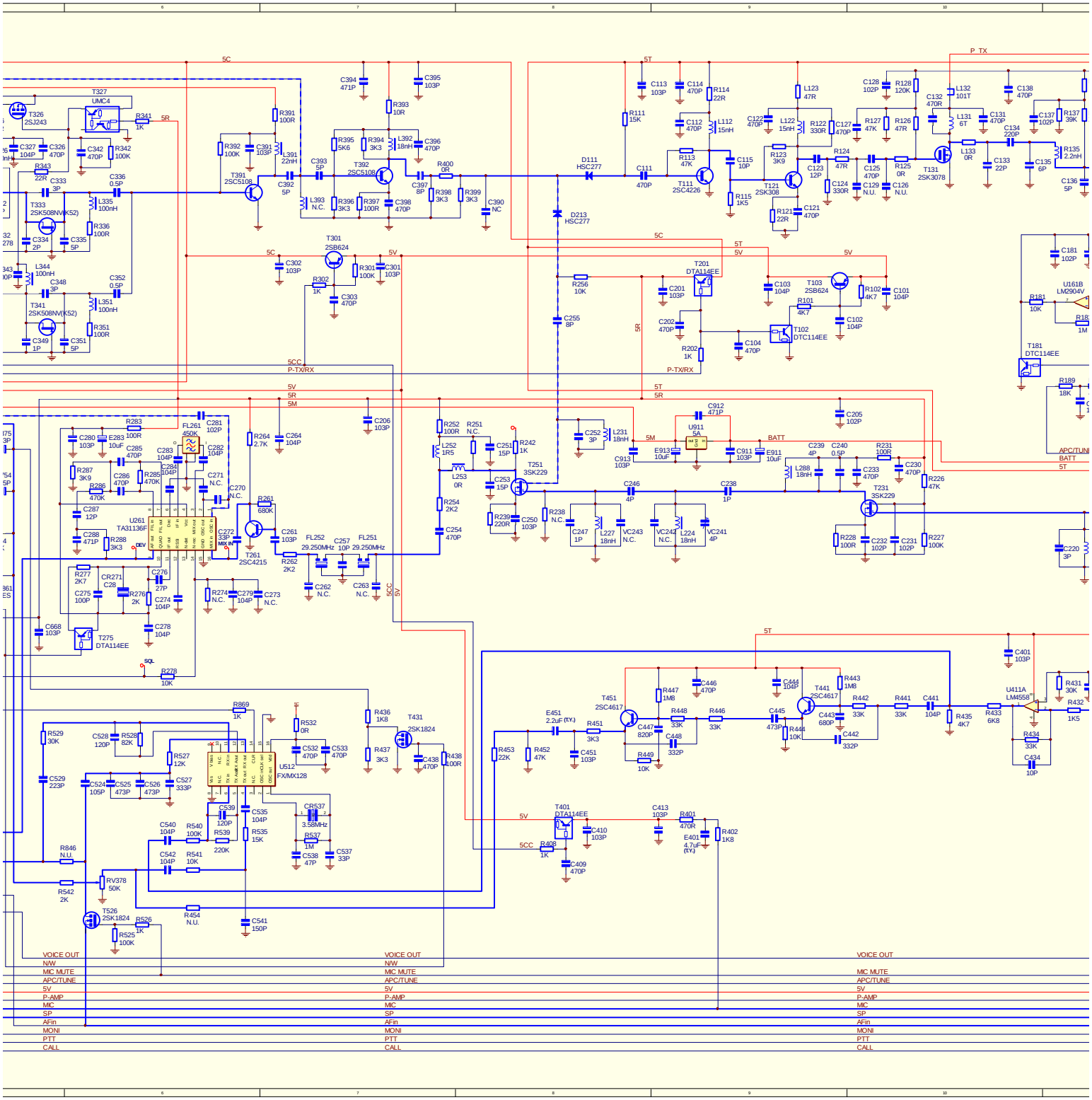
VOICE OUT
N/W
MIC MUTE
APC/TUNE
5V
P-AMP
MIC
SP
AFin
MONI
PTT
CALL
P-TX/RX
P_TX
BATT
U512
FX/MX128
U261
TA31136F
U411A
LM4558
U161B
LM2904V
T326
2SJ243
T327
UMC4
T391
2SC5108
T392
2SC5108
T301
2SB624
T111
2SC4226
T121
2SK308
T131
2SK3078
T201
DTA114EE
T102
DTC114EE
T103
2SB624
T181
DTC114EE
T251
3SK229
T231
3SK229
T261
2SC4215
T275
DTA114EE
T431
2SK1824
T451
2SC4617
T441
2SC4617
T401
DTA114EE
T526
2SK1824
T333
2SK508NV(K52)
T341
2SK508NV(K52)
D111
HSC277
D213
HSC277
FL261
450K
FL251
29.250MHz
FL252
29.250MHz
CR537
3.58MHz

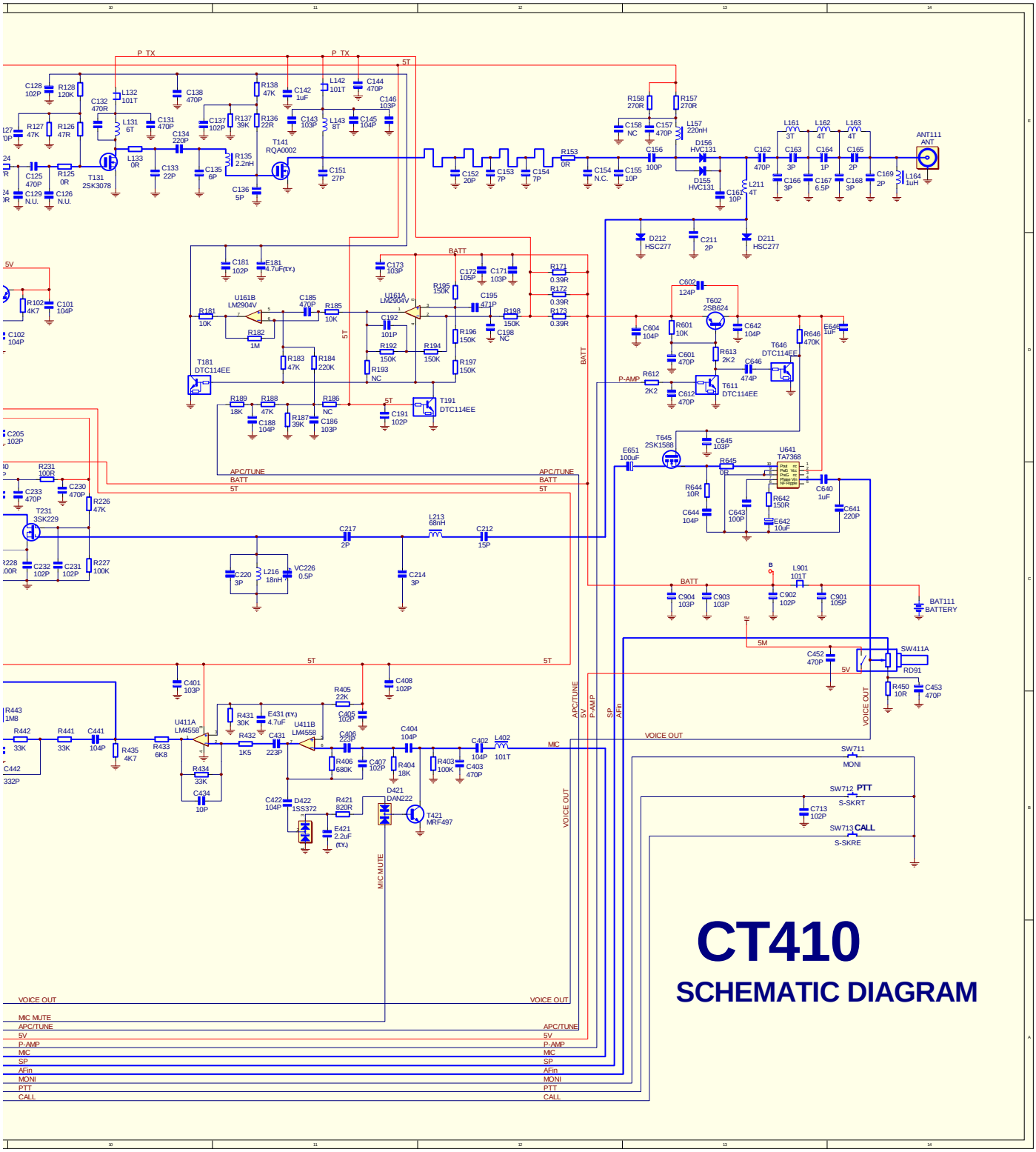

CT410

SCHEMATIC DIAGRAM

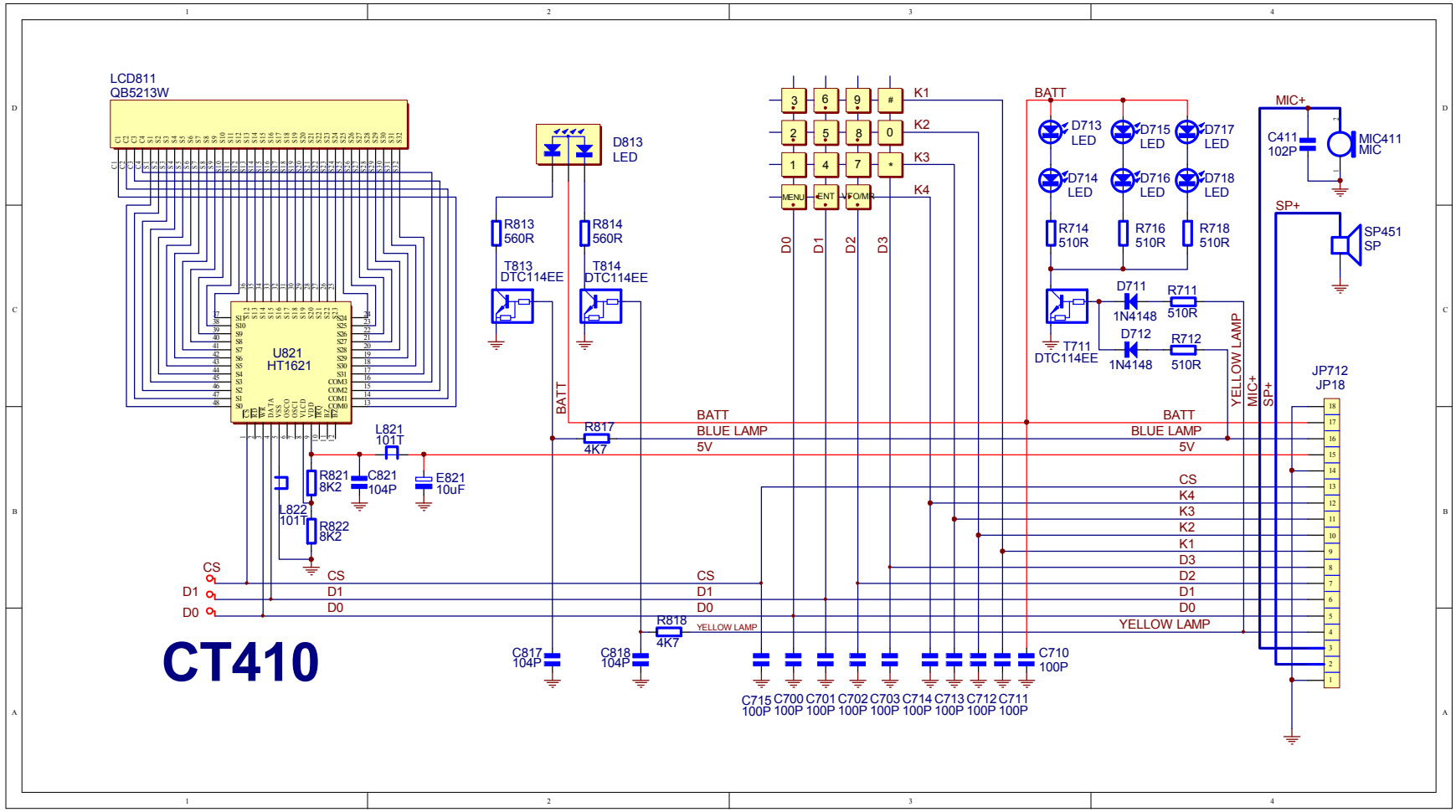
LCD811
QB5213W
U821
HT1621
D813
LED
R813
560R
R814
560R
T813
DTC114EE
T814
DTC114EE
K1
K2
K3
K4
MENU
ENT
VFO/MR
D0
D1
D2
D3
BATT
D713
LED
D715
LED
D717
LED
D714
LED
D716
LED
D718
LED
R714
510R
R716
510R
R718
510R
T711
DTC114EE
D711
1N4148
R711
510R
D712
1N4148
R712
510R
YELLOW LAMP
MIC+
SP+
C411
102P
MIC411
MIC
SP451
SP
JP712
JP18
L821
101T
R817
4K7
R821
8K2
C821
104P
E821
10uF
L822
101T
R822
8K2
BLUE LAMP
5V
CS
K4
K3
K2
K1
D3
D2
D1
D0
R818
4K7
C817
104P
C818
104P
C710
100P
C715 C700 C701 C702 C703 C714 C713 C712 C711
100P 100P 100P 100P 100P 100P 100P 100P 100P
CT410

Block diagram

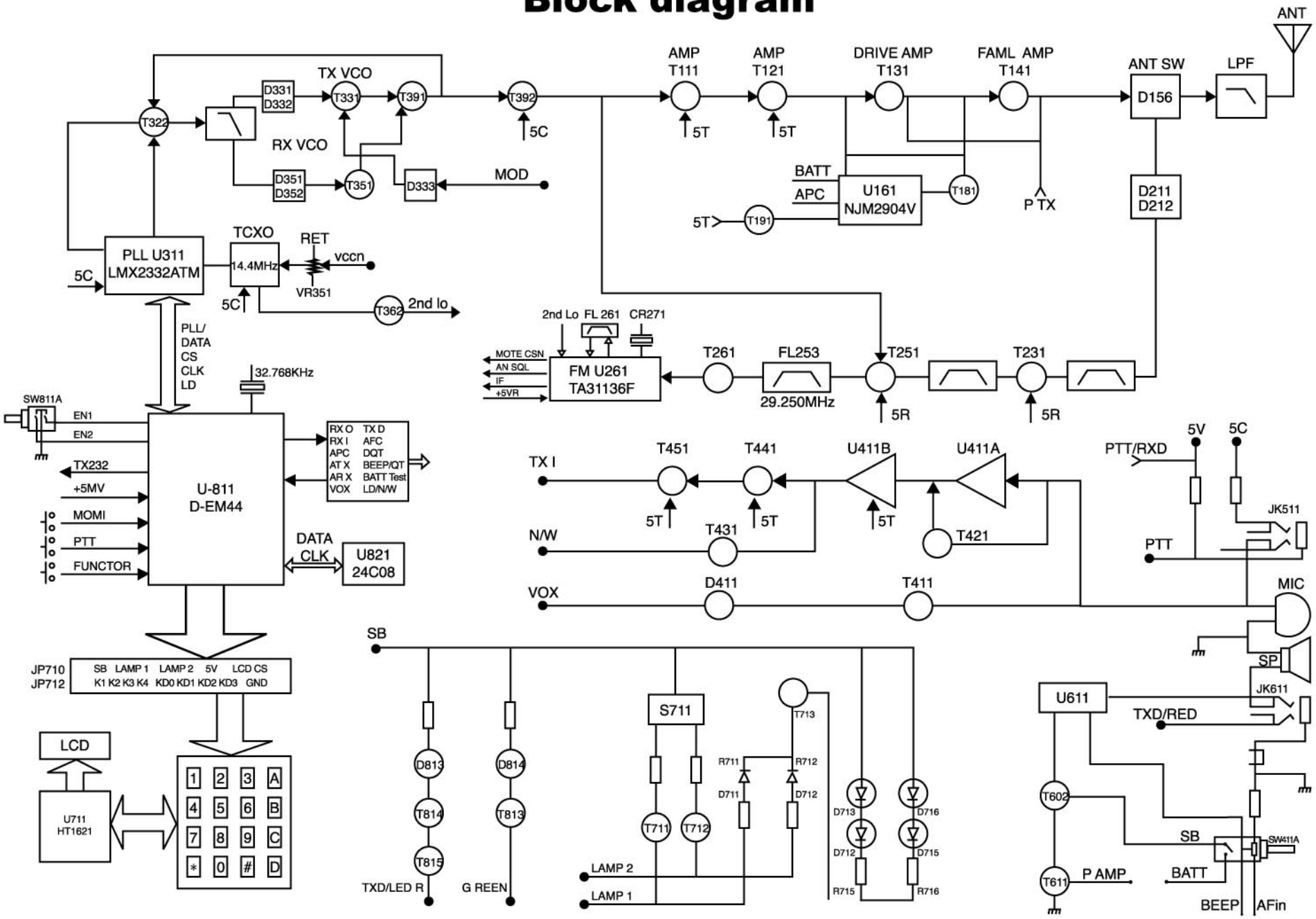

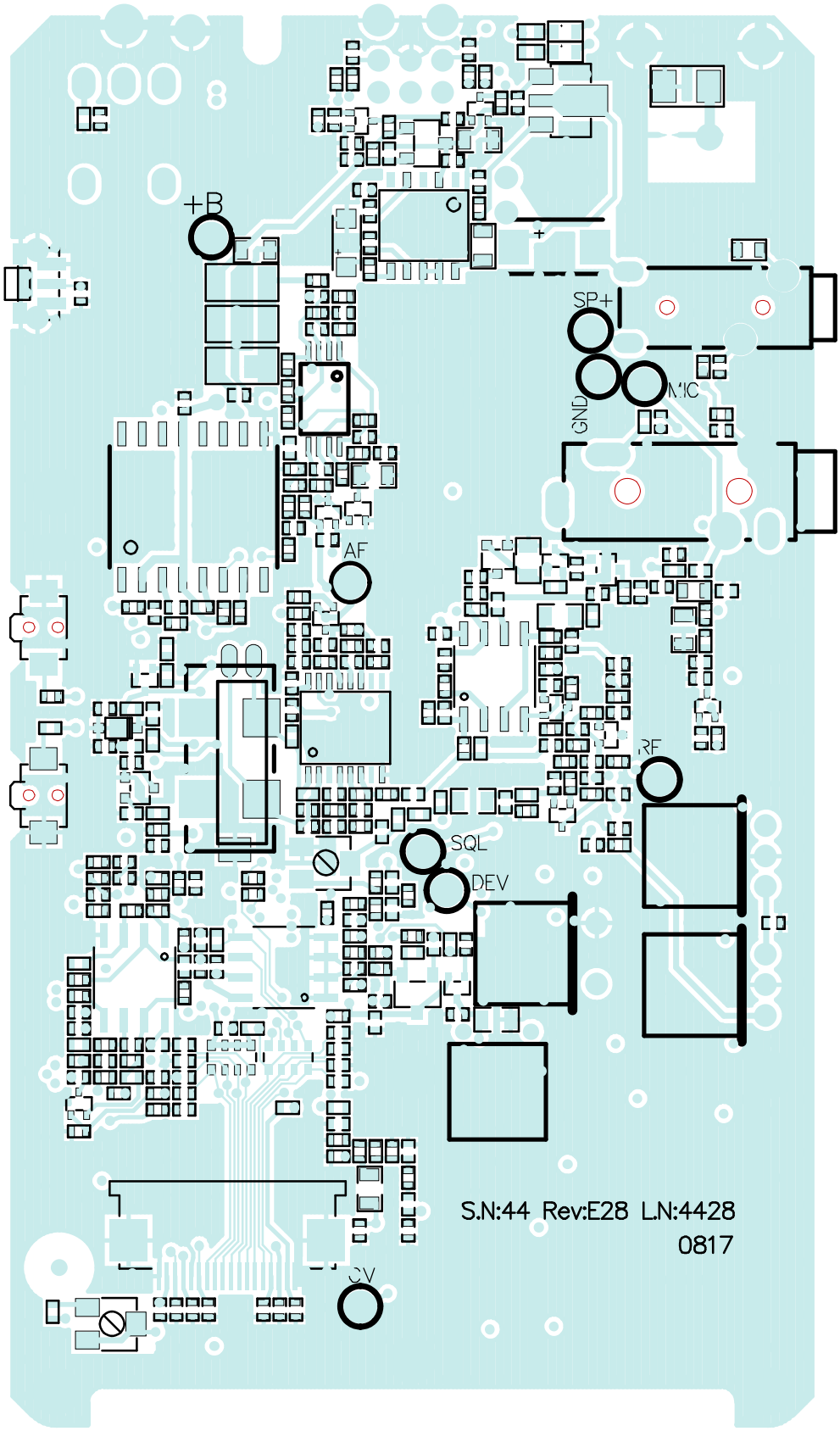
+B
SP+
GND
MIC
AF
RF
SQL
DEV
CV
S.N:44 Rev:E28 L.N:4428
0817

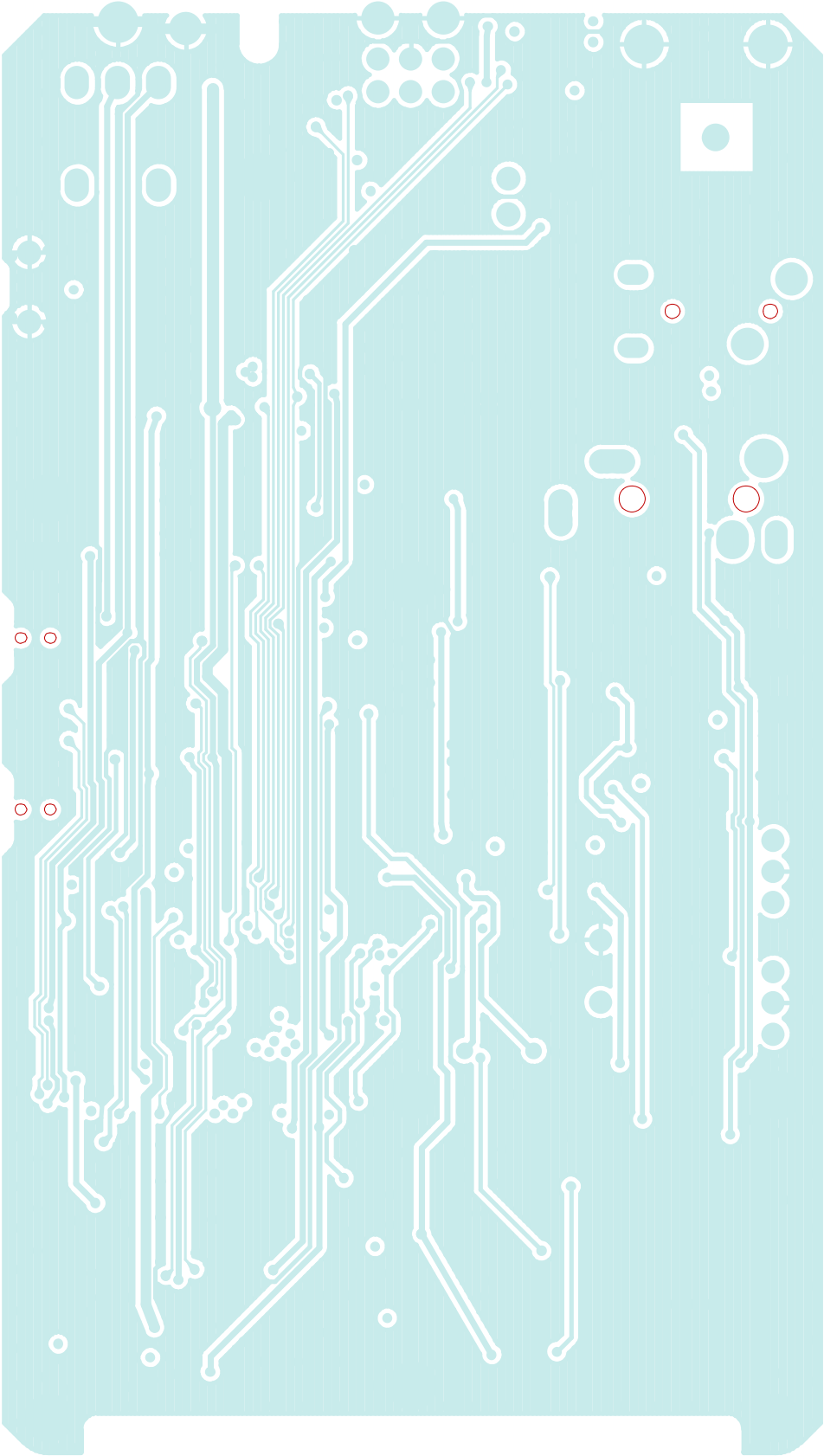

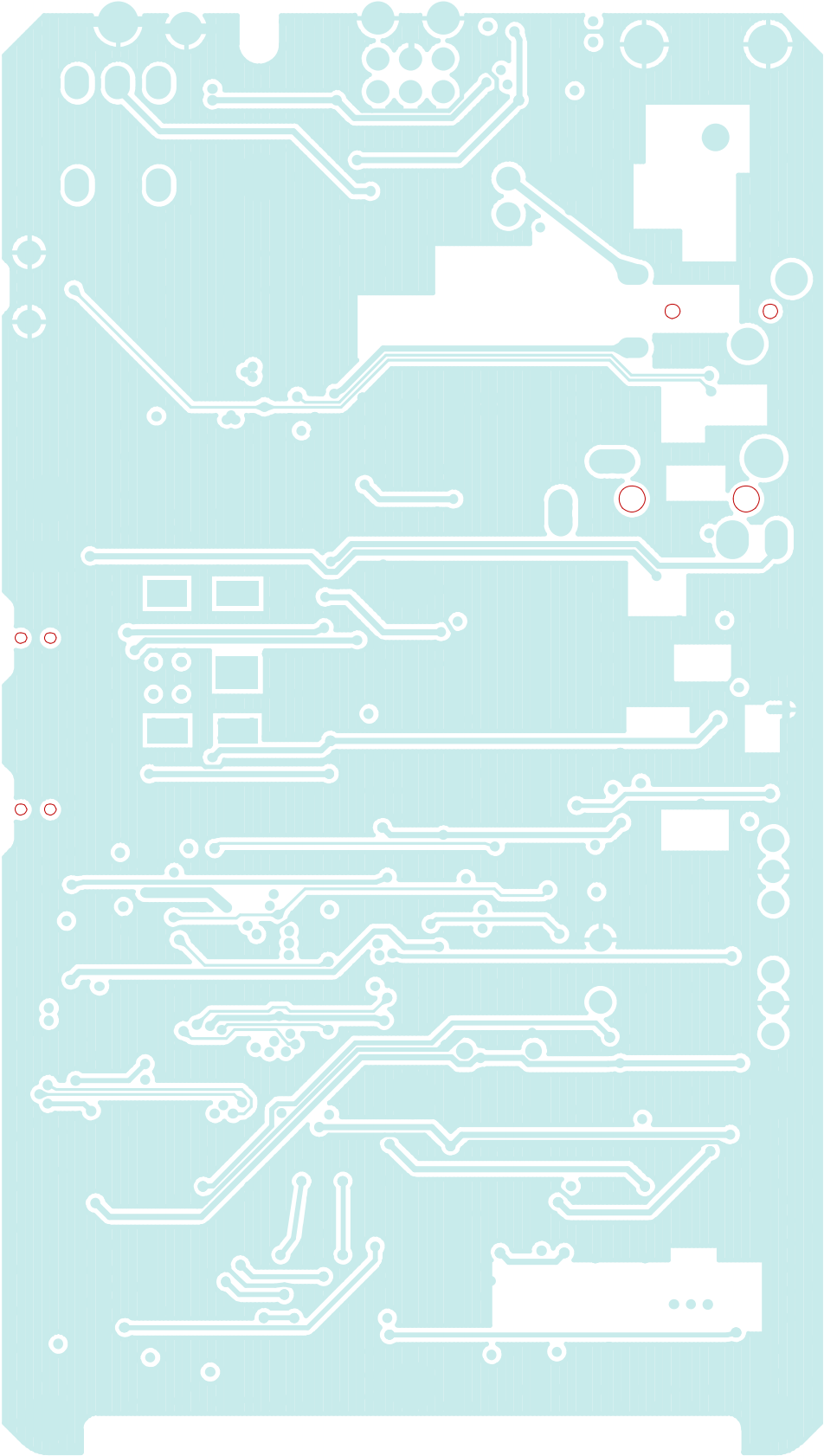

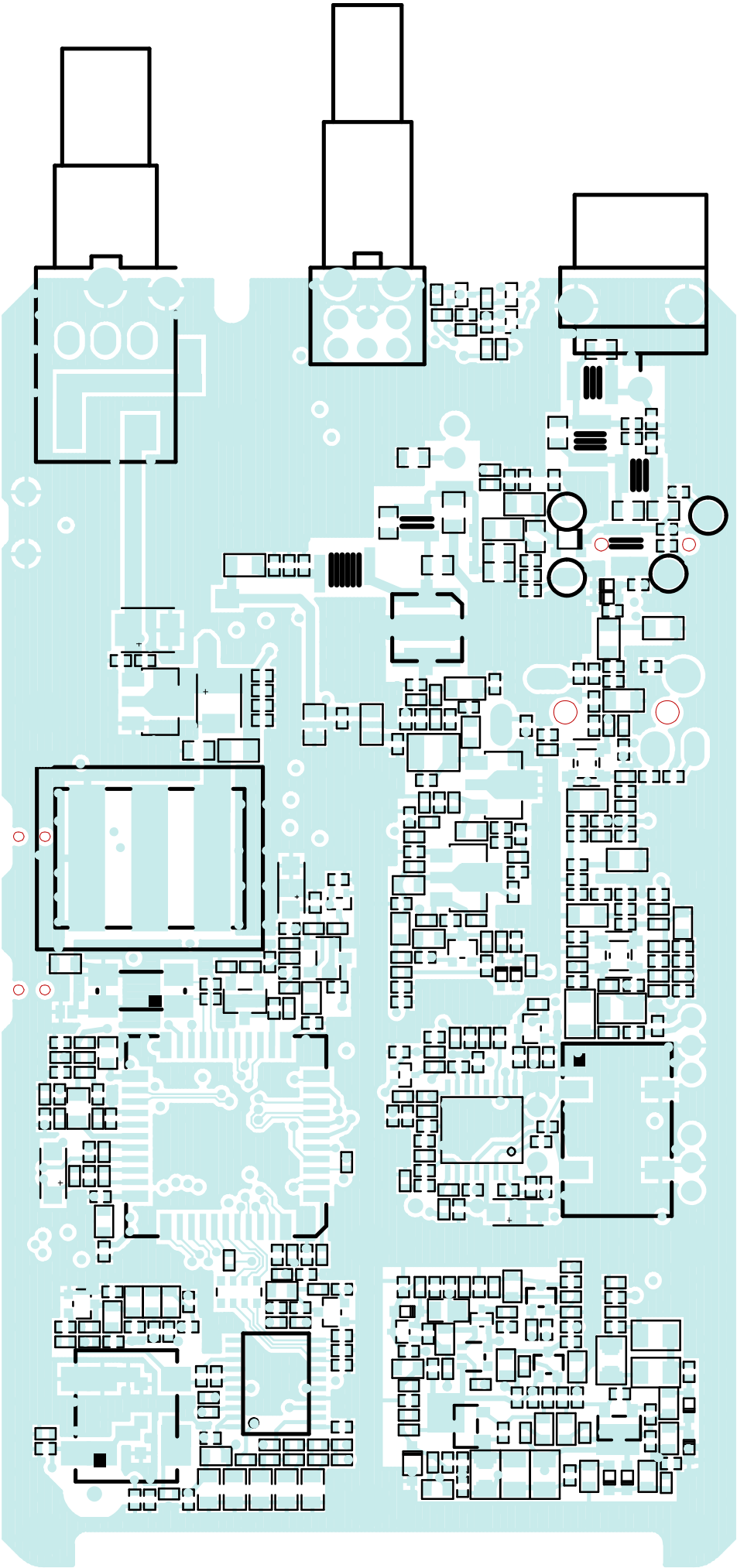

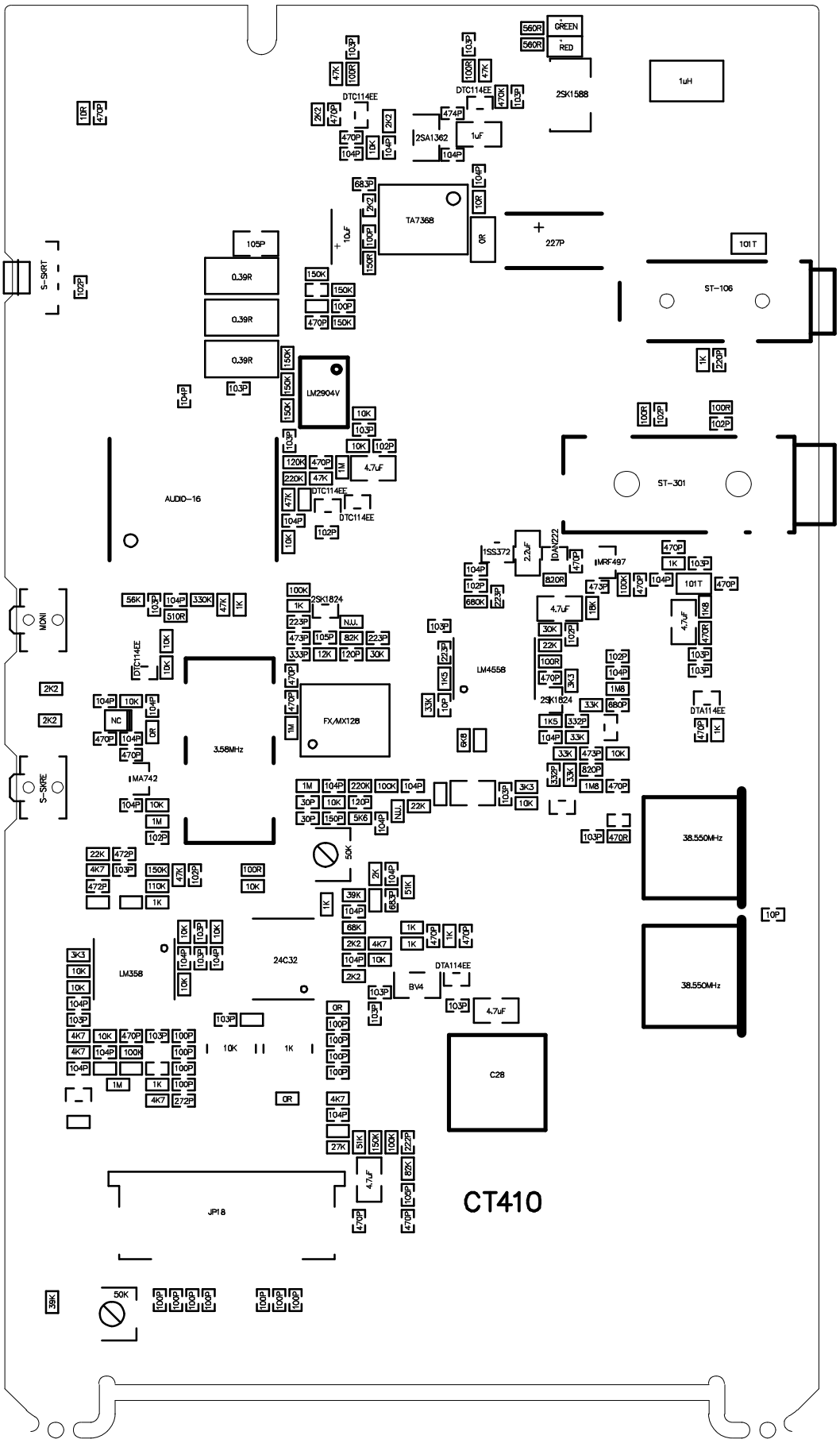
GREEN
RED
560R
560R
2SK1588
1uH
DTC114EE
2SA1362
1uF
TA7368
227P
101T
ST-106
ST-301
S-SKRT
0.39R
0.39R
0.39R
105P
LM2904V
4.7uF
AUDIO-16
1SS372
2.2uF
IDA1022
IMRF497
MONI
2SK1824
N.U.
LM4558
FX/MX128
3.58MHz
IMA742
S-SKRE
DTA114EE
38.550MHz
38.550MHz
LM358
24C32
BV4
C28
JP18
CT410

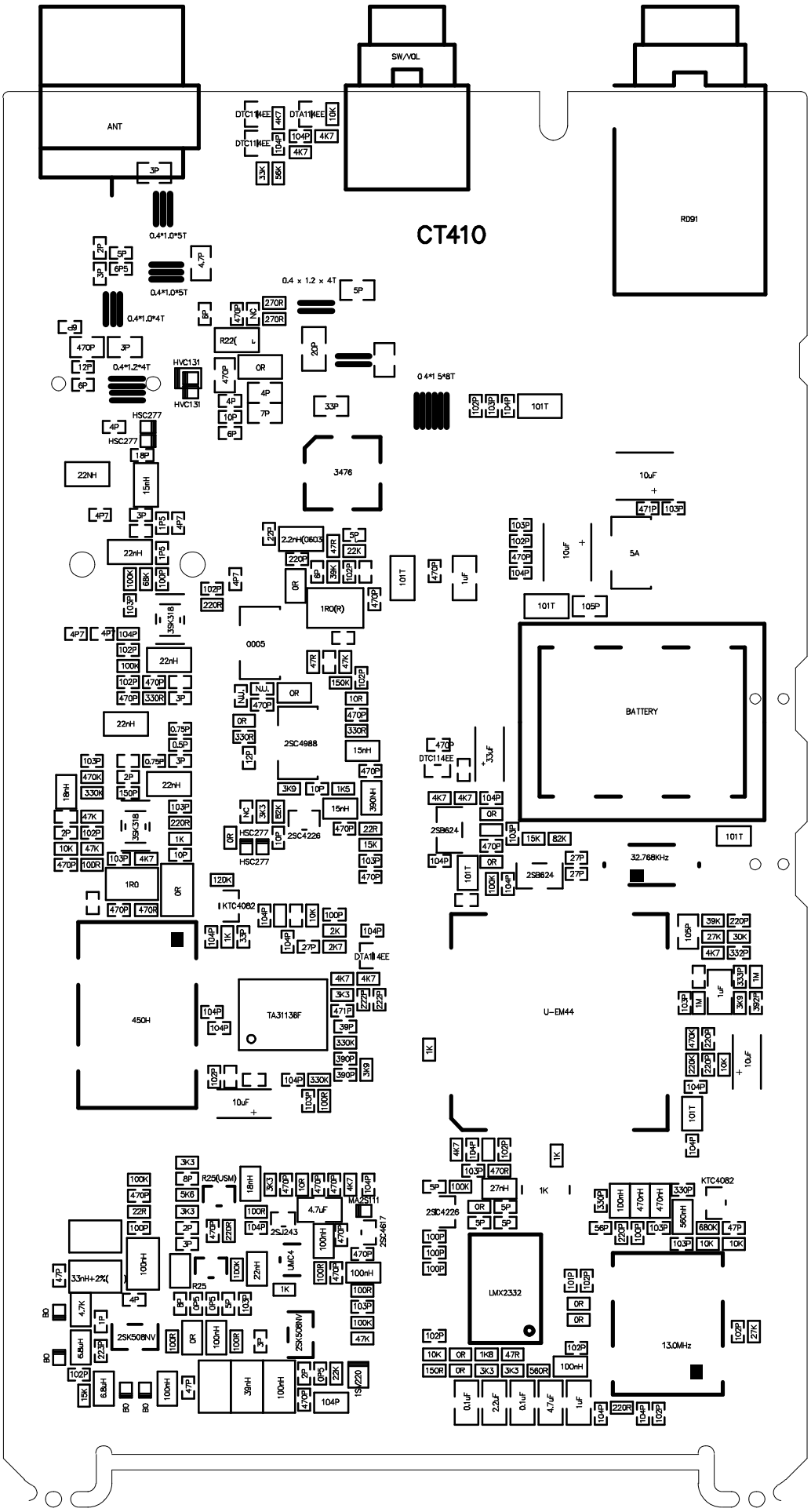
CT410
ANT
SW/VOL
RD91
BATTERY
U-EM44
TA31136F
LMX2332
2SC4988
2SC4226
2SB624
2SK508NV
2SC4617
2SD243
UMC4
MA2S111
DTC114EE
DTA114EE
DTC114EE
KTC4082
HSC277
HVC131
3476
450H
32.768KHz
13.0MHz
0.4*1.0*5T
0.4*1.0*4T
0.4*1.2*4T
0.4 x 1.2 x 4T
0.4*1.5*8T
R22(
R25(USM)
R25
22NH
22nH
15nH
18nH
39nH
100nH
390nH
470nH
560nH
33nH+2%(
2.2nH(0603)
1R0(R)
1R0
0005
5A
10uF

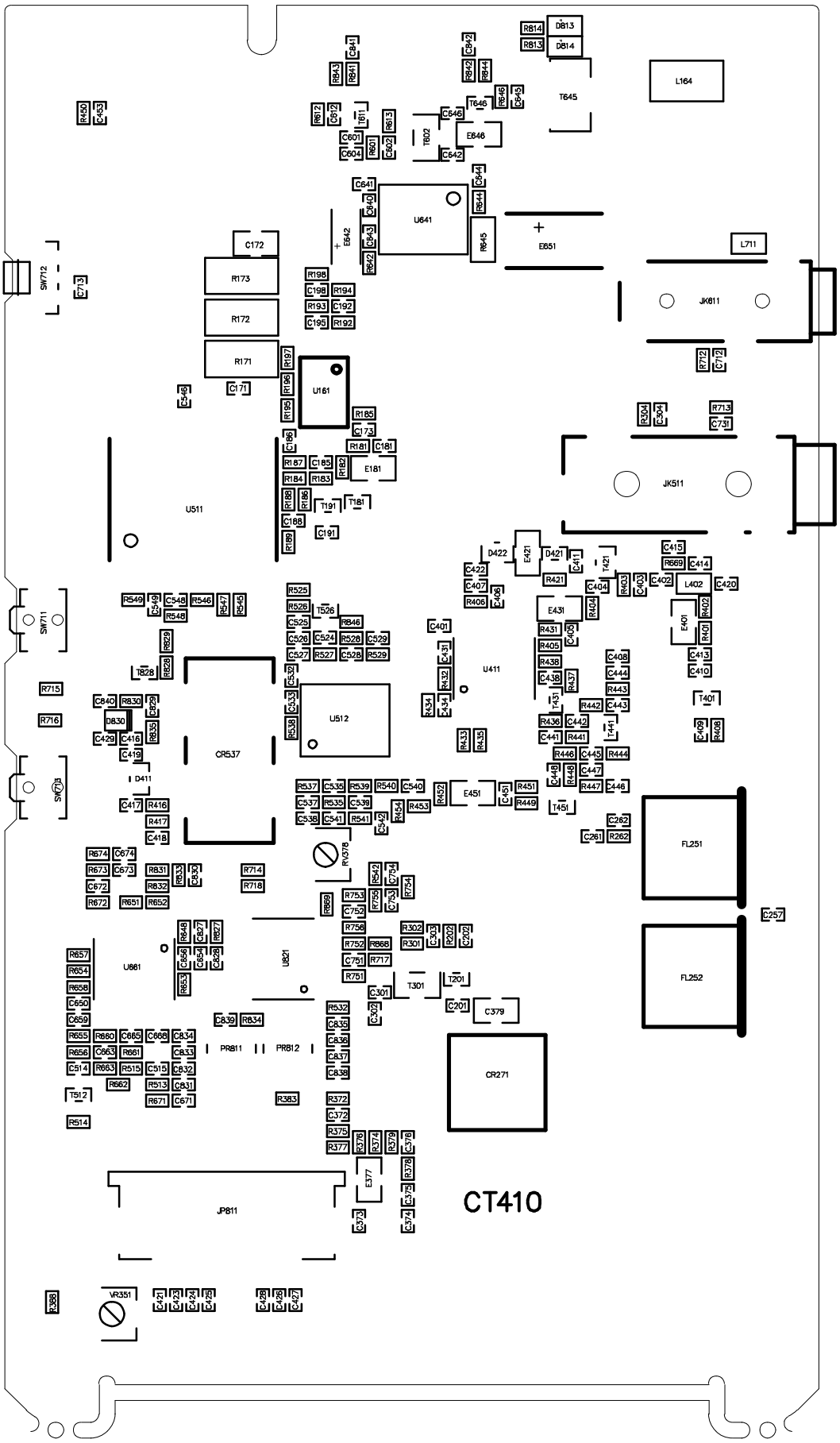
CT410
L164
T645
D813
D814
R814
R813
E646
T646
T602
U641
E642
E651
L711
JK611
C172
R173
R172
R171
SW712
C713
U161
C171
U511
E181
T191
T181
JK511
R712
C712
R713
C731
R304
C304
D422
E421
D421
T421
L402
C420
E431
E401
U411
U512
CR537
SW711
SW713
D411
E451
T451
FL251
FL252
C257
R578
U661
U821
T301
T201
C379
CR271
PR811
PR812
T512
JP811
E377
VR351

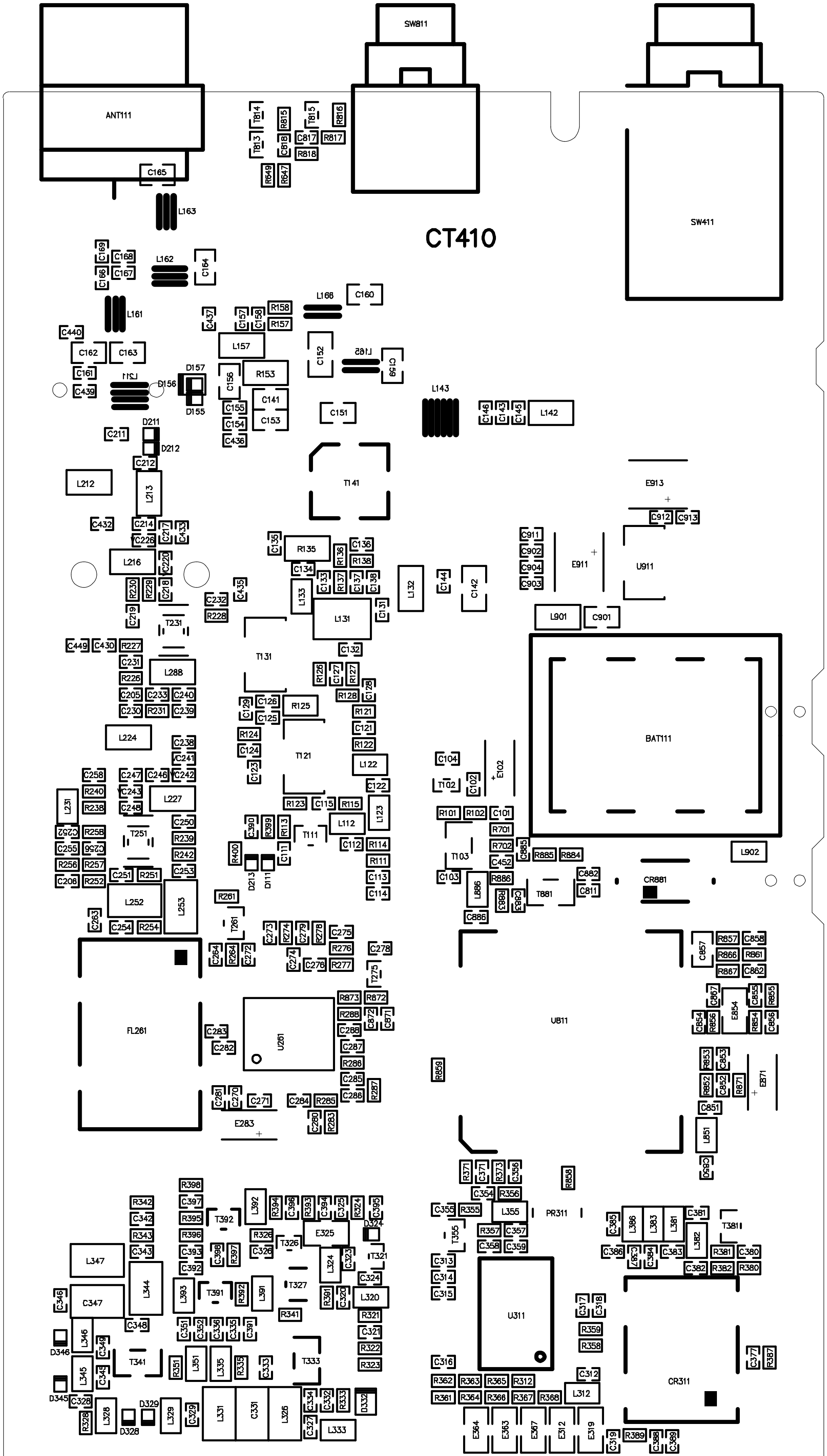
CT410

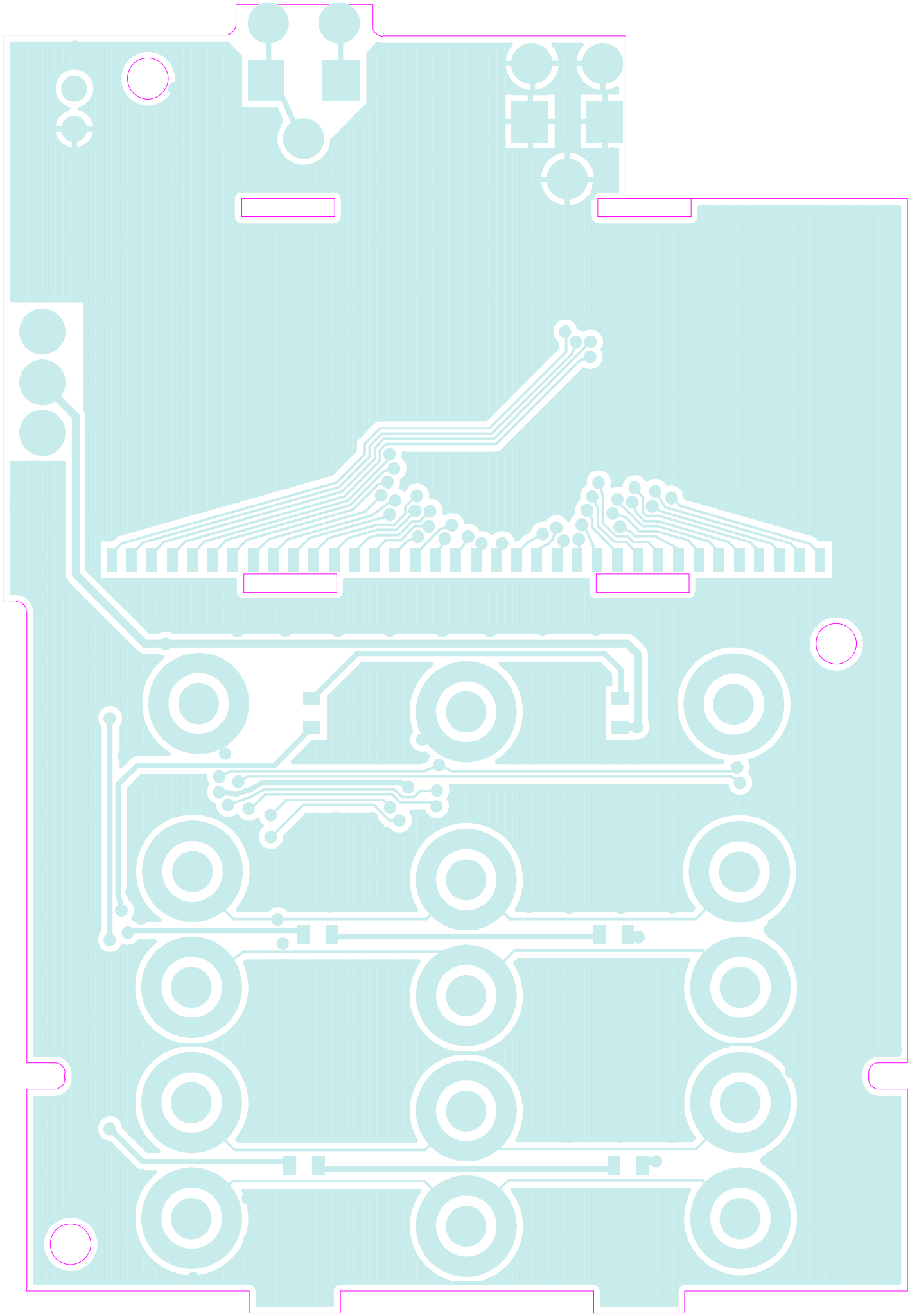

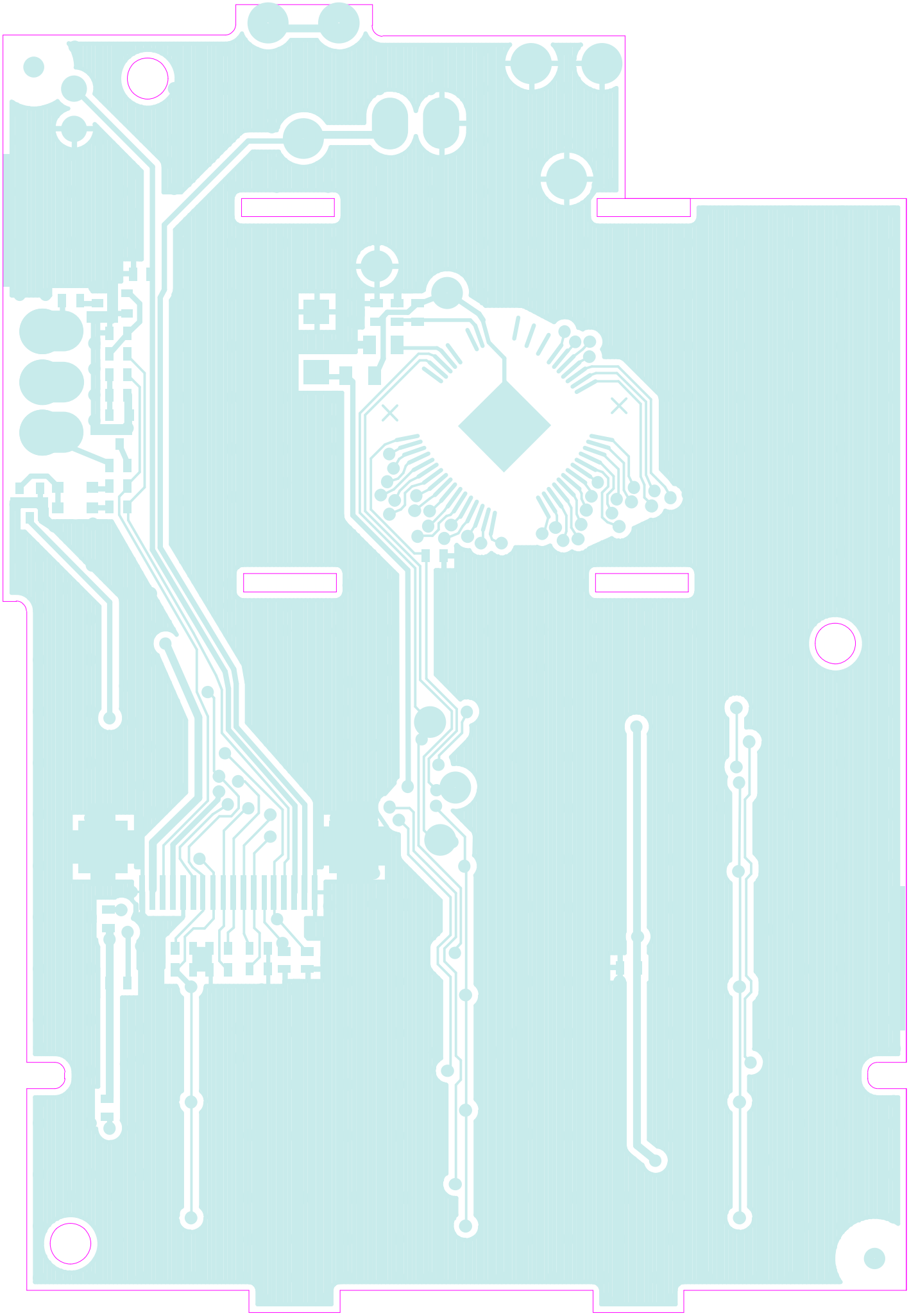

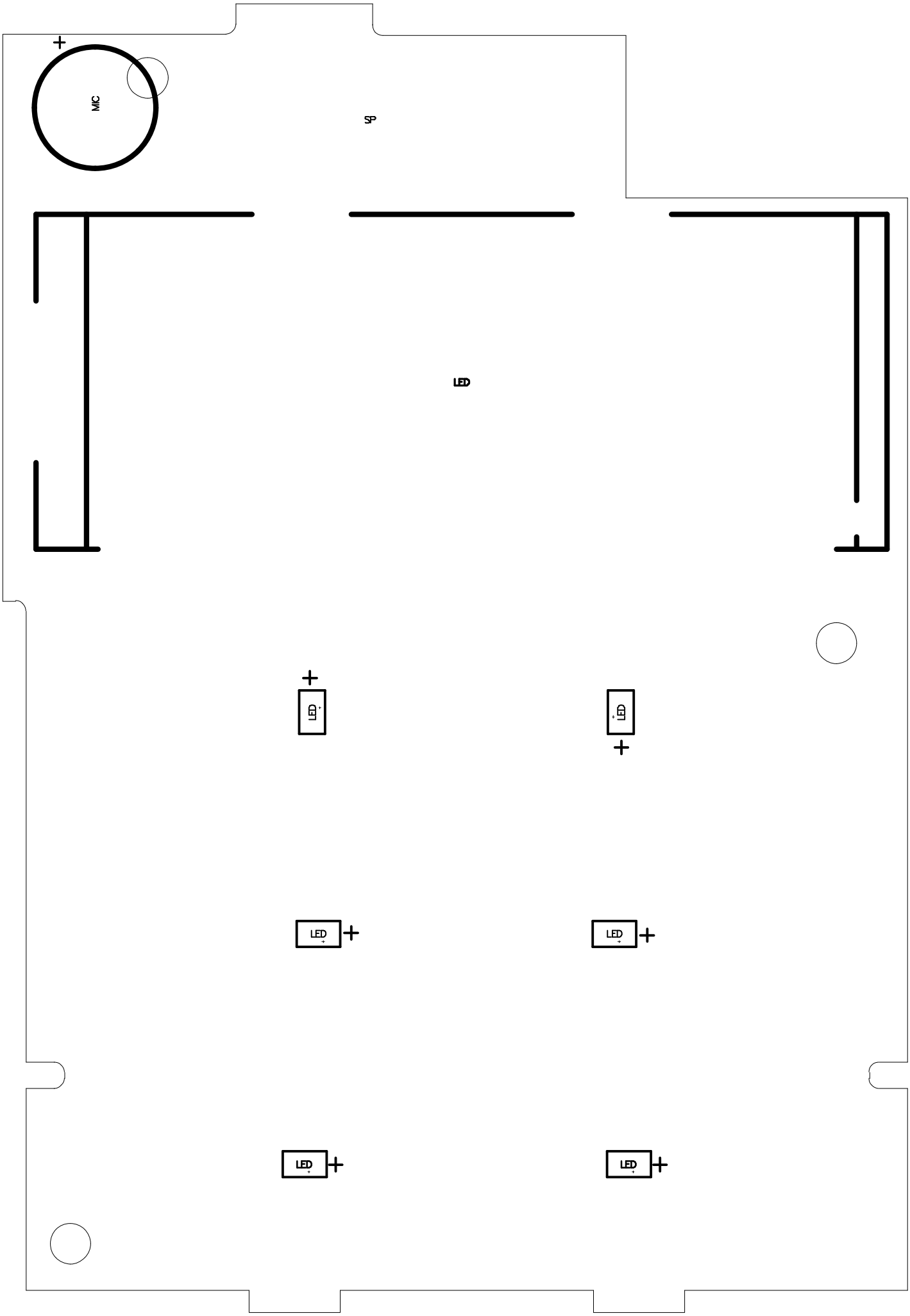
MIC
SP
LED
LED
LED
LED
LED
LED
LED
LED

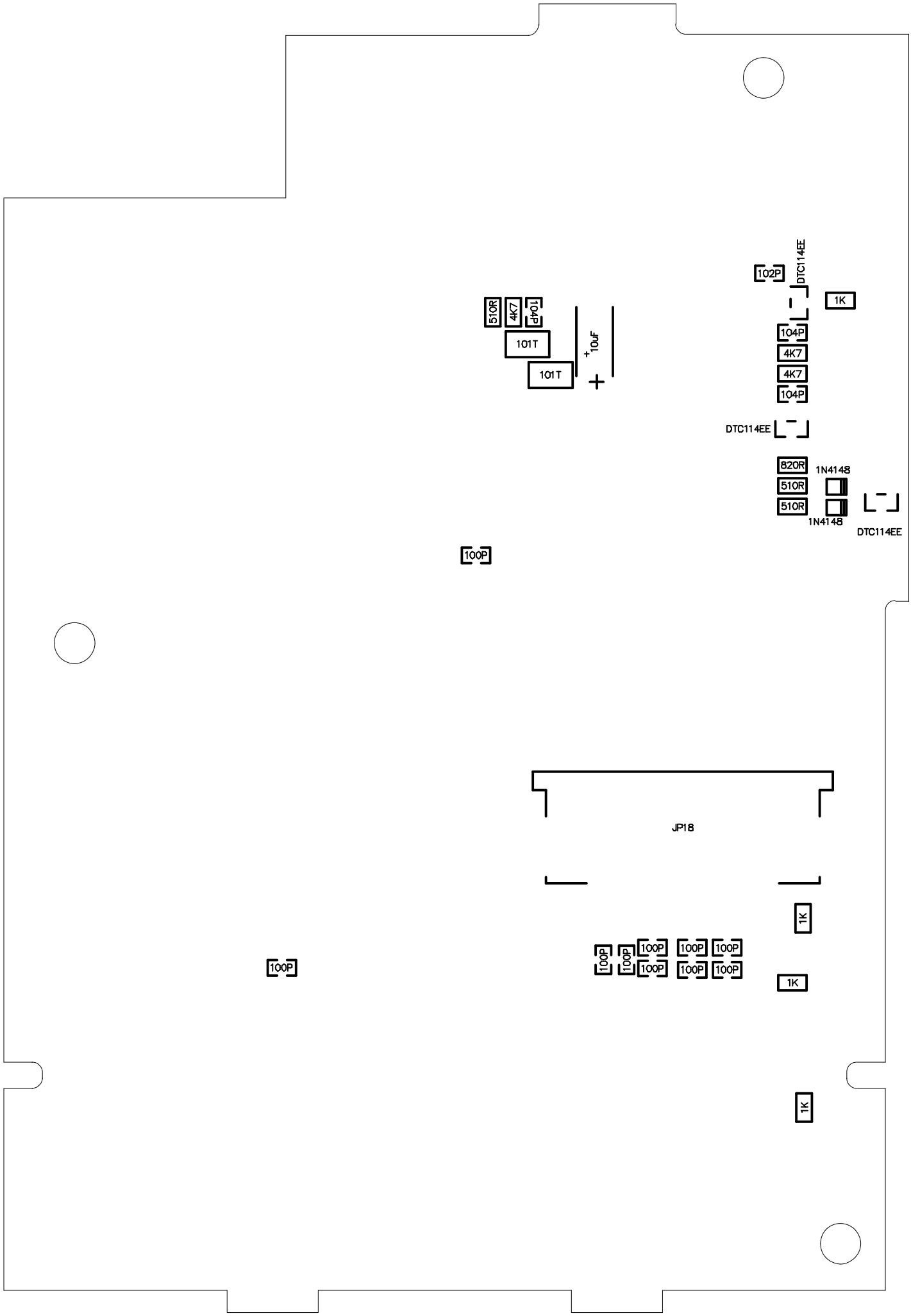
510R
4K7
104P
101T
101T
10uF
102P
DTC114EE
1K
104P
4K7
4K7
104P
DTC114EE
820R
510R
510R
1N4148
1N4148
DTC114EE
100P
JP18
1K
100P
100P
100P
100P
100P
100P
100P
100P
100P
1K
1K

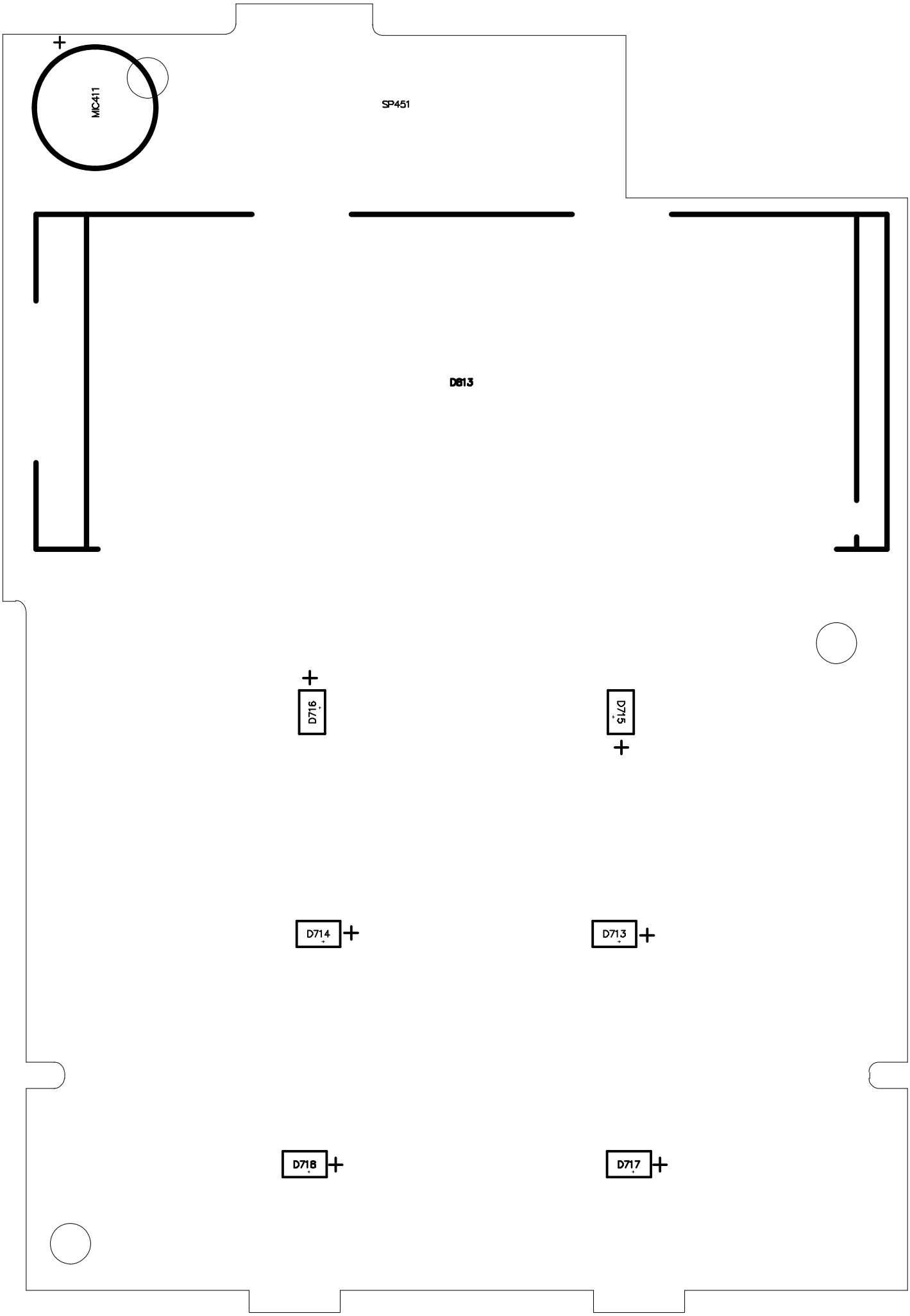
MIC411
SP451
D813
D716
D715
D714
D713
D718
D717

C411
T814
R814
C818
R818
R817
C817
T813
R813
D712
R712
R711
D711
T711
R821
R822
C821
L822
L821
E821
C715
JP712
R716
C710
C700
C701
C703
C702
C711
C712
C713
C714
R714
R718

厦门市普星电子科技有限公司

CT410

						VERSION	V1.00	2008.12.03
NO.	items	part No.	DESP.	Description	Qty	material	TECHNICS	
塑胶件								
1		PXCT410MK01	面壳housing	housing	1	ABS+PC	MOLD	
2		PXCT410CDZHK01	充电座后壳	charger's black case	1	ABS+PC	MOLD	
3		PXCT410XYM101	旋扭帽-1knob1	knob1	1		MOLD	
4		PXCT410XYM201	旋扭帽-2knob2	knob2	1		MOLD	
5		PXCT410DCCPJ01	电池触片架	battery case1	1	ABS+PC	MOLD	
6		PXCT410CPJ01	触片架	battery case2	1	ABS+PC	MOLD	
7		PXCT410MP01	铭牌	Name brand	1		MOLD	
8		PXCT410JP01	镜片	Len	1			
9		PXCT410PTTGDJ01	PTT固定架	PTT frame	1	ABS+PC	MOLD	
10		PXCT410DCXG01	电池下盖	Bettery case(front)	1	ABS+PC	MOLD	
11		PXCT410BGB01	背光板		1	PC	MOLD	
12		PXCT410DCG01	电池盖	Bettery case(back)	1	ABS+PC	MOLD	
13		PXCT410DCK01	电池扣	battery lock	2	ABS+PC	MOLD	
14		PXCT410ZCQK01	座充前壳	charger's front case	1	ABS+PC	MOLD	
硅胶件								
15		PXCT410ES01	耳塞	Jack cover	1	silica gel	oil pressure	
16		PXCT410PTTJ01	PTT键	PTT key	1	silica gel	oil pressure	
17		PXCT410SZJ01	数字键	keypad	1	silica gel	Oil pressure,Carve	
18		PXCT410ZFJFSQ01	正负极防水圈		1	silica gel	oil pressure	
19		PXCT410LBHD01	喇叭红点		1	silica gel	oil pressure	
20		PXCT410DP201	垫片-1	cushion	1	PVC	punch	
21		PXCT410LBD01	喇叭垫	speaker cushion	1	silica gel	oil pressure	
22		PXCT410FSQ01	防水圈	waterproof circle	1	silica gel	oil pressure	
五金件								
23		PXCT410JCP01	接触片	speaker connector	2	Phosphor copper +Gild	punch	
24		PXCT410LBGDJ01	喇叭固定架	Speaker fixing	1	stainless steel	punch	

确认：　　审核：　　制表：

25		PXCT410DCTP01	电池弹片	battery metal lock	1	spring steel+nickel	punch	
26		PXCT410DCLJP01	电池连接片	battery connector	3	Phosphor copper +Gild	punch	
27		PXCT410MLP01	唛拉片		1	stainless steel	punch	
28		PXCT410LK01	铝壳	Chassis	1	aluminium	压铸	
29		PXCT410ZFJJCP01	正负极接触片	battery connector on radio	3	Phosphor copper +nickel	punch	
30		PXCT410CDZJCP01	充电座接触片	charger pin	4	Phosphor copper +nickel	punch	
31		PXCT410ZFJCJD01	正负极接触点	battey pin	4	Phosphor copper +Gild	punch	
32	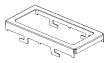	PXCT410YJK01	液晶框	LCD frame	1		punch	
33		PXCT410LS101	螺丝-1 M2.3*10	screw	4	nigrescence		
34		PXCT410LS201	螺丝-2 M2.0*3		10	nickel		
35		PXCT410LS301	螺丝-3 M1.8*4		2	nickel		
电子件								
36	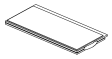	PXCT410YJ01	液晶	LCD	1			
37		PXCT410BMT01	班马条	Zebra	1			
	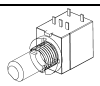	PXCT410DYKG01	电源开关	Power switch	1			
		PXCT410DWQ01	定位器	Channel switch	1			
		PXCT410TXT01	天线头	Antenna connector	1			
38		PXCT410LBP01	喇叭布	Speaker cloth	1			
39		PXCT410LB01	喇叭	Speaker	1			
40		PXC410TX01	天线	Antenna	1			

确认： **审核：** **制表：**

CT410 BOM								修改日期	
FREQ.	400-470，窄								
温补/中频	13.0/38.550								
MODEL	SPEC.	QTY	POSITION NO.						REMARK
CAPACITOR									
0P5	C0402	4	C336	C332	C352	VC241			
0.75P	C0402	2	C238	C246					
1P	C0402	1	C349						
1P5	C0402	2	C217	VC220					
2P	C0402	5	VC243	C334	C393	C169	C255		
3P	C0402	6	VC242	C239	C214	C333	C392	C166	
4P	C0402	3	C211	C348	C155				
4P7	C0402	5	C449	C435	C433	C432	C430		
5P	C0402	7	C335	C359	C358	C357	C355	C136	
			C168						
6P	C0402	5	C133	C440	C439	C437	C436		
6P5	C0402	1	C167						
8P	C0402	2		C397	C351				
10P	C0402	6	C257	C434	C253	C115	C154	C111	
12P	C0402	2	C123	C161					
18P	C0402	1	C212						
22P	C0402	1		C135					
27P	C0402	3	C811	C882	C276				
30P	C0402	2	C537	C538					
33P	C0402	1		C272					
39P	C0402	1	C287						
47P	C0402	3		C329	C346	C380			
56P	C0402	1	C386						
100P	C0402	25	C421	C423	C424	C425	C426	C427	
			C428	C192	C831	C832	C833	C834	
			C835	C836	C837	C838	C643	C218	
			C343	C275	C313	C314	C315	C384	
			C317						
102P	C0402	26	C418	C830	C304	C181	C191	C713	
			C731	C405	C407	C408	C256	C205	
			C231	C232	C328	C318	C312	C356	
			C377	C389	C128	C137	C146	C281	
			C316	C902					
103P	C0402	38	C201	C301	C171	C173	C186	C451	

CT410 BOM								修改日期	
FREQ.	400-470，窄								
温补/中频	13.0/38.550								
MODEL	SPEC.	QTY	POSITION NO.						REMARK
			C261	C827	C841	C842	C413	C549	
			C401	C410	C414	C302	C645	C654	
			C659	C668	C673	C839	C258	C250	
			C251	C219	C321	C391	C885	C854	
			C383	C113	C143	C280	C382	C911	
			C913	C354					
104P	C0402	49	C754	C751	C752	C188	C441	C444	
			C535	C540	C542	C602	C604	C642	
			C644	C372	C546	C548	C416	C402	
			C417	C422	C514	C650	C656	C663	
			C840	C828	C829	C326	C395	C371	
			C817	C818	C851	C883	C388	C101	
			C103	C145	C264	C282	C283	C284	
			C273	C274	C278	C319	C903	C850	
			R227						
105P	C0402	2	C375	C524					
120P	C0402	2	C528	C539					
150P	C0402	2	C541	C248					
220P	C0402	6	C712	C858	C852	C853	C387	C134	
222P	C0402	3	C376	C871	C872				
223P	C0402	5	C525	C529	C406	C431	C345		
272P	C0402	1	C671						
330P	C0402	2	C381	C385					
332P	C0402	3	C442	C448	C862				
333P	C0402	2	C527	C855					
390P	C0402	2	C285	C286					
392P	C0402	1	C856						
470P	C0402	47	C411	C420	C419	C374	C453	C202	
			C303	C185	C195	C446	C438	C532	
			C533	C601	C612	C403	C409	C665	
			C373	C429	C415	C206	C230	C233	
			C254	C320	C327	C342	C396	C398	
			C323	C324	C325	C394		C112	
			C114	C121	C122	C125	C131	C144	
			C288	C912	C157	C904	C104	C452	

CT410 BOM								修改日期	
FREQ.	400-470，窄								
温补/中频	13.0/38.550								
MODEL	SPEC.	QTY	POSITION NO.						REMARK
472P	C0402	2	C674	C672					
473P	C0402	3	C445	C526	C404				
474P	C0402	1	C646						
680P	C0402	1	C443						
683P	C0402	2	C753	C641					
820P	C0402	1	C447						
3P	C0603	2	C163		C160				
4P	C0603	1	C141						
4.7P	C0603	1	C164						
5P	C0603	1	C165						
7P	C0603	1		C153					
33P	C0603	1	C151						
104P	C0603	1	L333						
105P	C0603	2	C901	C857					
470P	C0603	2	C156	C162					
20P	C0805	1	C152						
105P	C0805	1	C172						
0.1uF	C0805	2	E364	E367					
1uF	C0805	4	E646	E854	C142	E319			
2.2uF	C0805	2	E421	E363					
4.7uF	C0805	7	C379	E181	E401	E377	E431	E325	
			E312						
RESISTOR									
0R	R0402	12	R383	R532	R835	R359	R358	R701	
			R886	R357	R363	R364	R400	R124	
1K	R0402	16	R869	R301	R669	R202	R302	R712	
			R545	R408	R526	R513	R652	R242	
			R858	R341	R264	R859			
1K5	R0402	3	R436	R432	R115				
1K8	R0402	2	R402	R365					
2K	R0402	2	R542	R276					
2K2	R0402	7	R715	R716	R751	R752	R612	R613	
			C640						
2K7	R0402	1	R277						
3K3	R0402	10	R437	R451	R657	R394	R398	R396	

CT410 BOM								修改日期	
FREQ.	400-470，窄								
温补/中频	13.0/38.550								
MODEL	SPEC.	QTY	POSITION NO.						REMARK
			R366	R367	R288	R399			
3K9	R0402	3	R854	R123	R287				
4K7	R0402	17	R868	R372	R655	R656	R671	R673	
			R251	R324	R371	R815	R817	R818	
			R867	R872	R873	R101	R102		
5K6	R0402	2	R541	R395					
6K8	R0402	1	R433						
10K	R0402	26	R181	R185	R189	R444	R449	R717	
			R535	R601	R827	R416	R648	R654	
			R658	R653	R660	R718	R828	R829	
			R830	R256	R816	R871	R362	R380	
			R278	R382					
10R	R0402	4	R450	R644	R393		R121		
12K	R0402	1	R527						
15K	R0402	3	R328	R885	R111				
18K	R0402	1	R404						
22K	R0402	5	R453	R405	R674	R333	R138		
22R	R0402	2	R343	R114					
27K	R0402	3	R377	R866	R387				
30K	R0402	3	R529	R431	R861				
33K	R0402	6	R441	R442	R446	R448	R434	R649	
39K	R0402	4	R753	R388	R857	R137			
47K	R0402	10	R833	R183	R188	R843	R844	R547	
			R258	R257	R323	R127			
47R	R0402	3	R126	R136	R312				
51K	R0402	2	R754	R376					
56K	R0402	2	R549	R647					
68K	R0402	2	R756	R229					
82K	R0402	4	R378	R528	R884	R113			
100K	R0402	12	R379	R540	R403	R525	R661	R230	
			R226	R322	R342	R392	R883	R355	
100R	R0402	13	R304	R438	R713	R714	R841	R842	
			R252	R335	R351	R326	R391	R321	
			R283						
110K	R0402	1	R832						

CT410 BOM								修改日期	
FREQ.	400-470，窄								
温补/中频	13.0/38.550								
MODEL	SPEC.	QTY	POSITION NO.						REMARK
120K	R0402	2	R187		R261				
150K	R0402	9	R831	R198	R192	R194	R195	R196	
			R197	R374	R128				
150R	R0402	2	R642	R361					
220K	R0402	3	R184	R539	R852				
220R	R0402	4	R228	R239	R397	R389			
270R	R0402	2	R157	R158					
330K	R0402	4	R546	R238	R285	R286			
330R	R0402	3	R231	C124	R122				
470K	R0402	3	R646	R240	R853				
470R	R0402	4	R401	R262	R254	R356			
510R	R0402	1	R548						
560R	R0402	3	R813	R814	R368				
680K	R0402	2	R406	R381					
820R	R0402	1	R421						
1M	R0402	7	R182	R537	R417	R662	R538	R855	
			R856						
1M8	R0402	2	R443	R447					
0R	R0603	3	R125	L351	L133				
47R	R0603								
4.7K	R0603	1	L346						
0R	R0805	3	R645	R153	L253				
0.39R	R1206	3	R171	R172	R173				
10K	RP-1206-4	1	PR811						
1K	RP-1206-4	2	PR812	PR311					
50K	RV1208	2	VR351	RV378					
10uF	EIA3216	3	E642	E871	E283				
33uF	EIA3216	1	E102						
10uF	EIA3528	2	E911	E913					
227P	EIA6032	1	E651						
COIL									
2.2nH	L0603	1	R135						
15nH	L0603	2	L112	L122					
18nH	L0603	2	L231	L392					
22nH	L0603	1	L391						

CT410 BOM								修改日期	
FREQ.	400-470，窄								
温补/中频	13.0/38.550								
MODEL	SPEC.	QTY	POSITION NO.						REMARK
27nH	L0603	1	L355						
100nH	L0603	6	L329	L335	L324	L320	L312	L386	
390NH	L0603	1	L123						
470nH	L0603	2	L381	L383					
560nH	L0603	1	L382						
101T	L0603	5	L711	L402	L902	L851	L886		
6.8uH	L0603	2	L328	L345					
15nH	L0805	1	L213						
22nH	L0805	5	L216	L227	L224	L288	L212		
101T	L0805	3	L132	L142	L901				
R22	L0805	1	L157						
33nH	L0805	1	C347						
33nH	L0805	1	C331						
100nH	L0805	2	L344	L326					
1R0	L0805	2	L252	L131					
1uH	L1310	1	L164						
0.4*1.2*4T	4T	2	L166		L211				
0.4*1.0*4T	4T	1	L161						
0.4*1.5*3T	3T								
0.4*1.0*5T	4T	2	L163	L162					
0.4*1.5*8T	8T	1	L143						
DIODE									
B0	D_ESC	4	D328	D329	D346	D345			
MA2S111	D_ESC	1	D324						KDS160E代
1SV220	D_USC	1	D332						
GREEN	D0603	1	D813						
RED	D0603	1	D814						
HSC277	D-ESC	4	D211	D212	D111	D213			KDS114E代
HVC131	D-ESC	2	D155	D157					
DAN222	D-ESM-DAN222	1	D421						KDS121E代
DYNATRON									
2SC4617	T_ESM	1	T321						
2SJ243	T_ESM	1	T326						
2SK508NV	T_TSM	2	T333	T341					
R25/2SC4226	T_USM	4	T391	T392	T355	T111			

CT410 BOM								修改日期	
FREQ.	400-470，窄								
温补/中频	13.0/38.550								
MODEL	SPEC.	QTY	POSITION NO.						REMARK
UMC4	T_USV	1	T327						KRX102U代
3476	T-2-5N1A-2SK3476	1	T141						
2SK1824	T-ESM-2SK1824	2	T431	T526					
DTA114EE	T-ESM-DTA114EE	4	T201	T401	T815	T275			KRA302E代
DTC114EE	T-ESM-DTA114EE	8	T611	T646	T828	T813	T814	T102	KRC402E代
			T181	T191					
2SC4988	T-SOT89-2SC4988	1	T121						
2SK1588	T-SOT89-2SK1588	1	T645						
0005	T-SOT89-2SK3078	1	T131						
5A	T-SOT89-5A	1	U911						
2SA1362	T-TSM-2SB624	1	T602						
BV4/2SB624	T-TSM-2SB624	3	T881	T103	T301				2SA1298代
3SK318	T-US4	2	T231	T251					
1SS372	T-USM-1SS372	1	D422						
MA742	T-USM-1SS372	1	D411						
KTC4082	T-USM-2SC3356(R25)	2	T381	T261					
MRF497	T-USM-MRF497	1	T421						KTC4075代
IC									
U-EM44	U-QFP44	1	U811						
AUDIO-16	U-SOIC16	1	U511						
24C32	U-SOP8	1	U821						
LM358	U-SOP8	1	U661						
LM4558	U-SOP8	1	U411						
TA7368	U-SSOP10-225-1.0	1	U641						
FX/MX128	U-SSOP16-225	1	U512						
TA31136F	U-SSOP16-225	1	U261						
LMX2332	U-SSOP20-225	1	U311						
LM2904V	U-SSOP8	1	U161						

CT410 BOM								修改日期	
FREQ.	400-470，窄								
温补/中频	13.0/38.550								
MODEL	SPEC.	QTY	POSITION NO.						REMARK
OTHER									
3.58MHz	FX-CS20	1	CR537						
32.768KHz	FX-DS0603	1	CR881						
13.0MHz	FX-DS0971	1	CR311						
S-SKRE	S-SKRE	2	SW713	SW711					
S-SKRT	S-SKRT-1	1	SW712						
JP18	JP-18-2	1	JP811						
BATTERY	BATT TUCHER-PX34	1	BAT111						
PIECE									
450H	FL-PBFC455R	1	FL261						
38.550MHz	FL-UM-5-3S	2	FL251	FL252					
C28	FX-6060-2S	1	CR271						
ST-106	JK-ST-106	1	JK611						
ST-301	JK-ST-301-6-F	1	JK511						
RD91	S-R09760NS	1	SW411						
SW/VOL	S-RD82-T02	1	SW811						
ANT	ANT	1	ANT111						