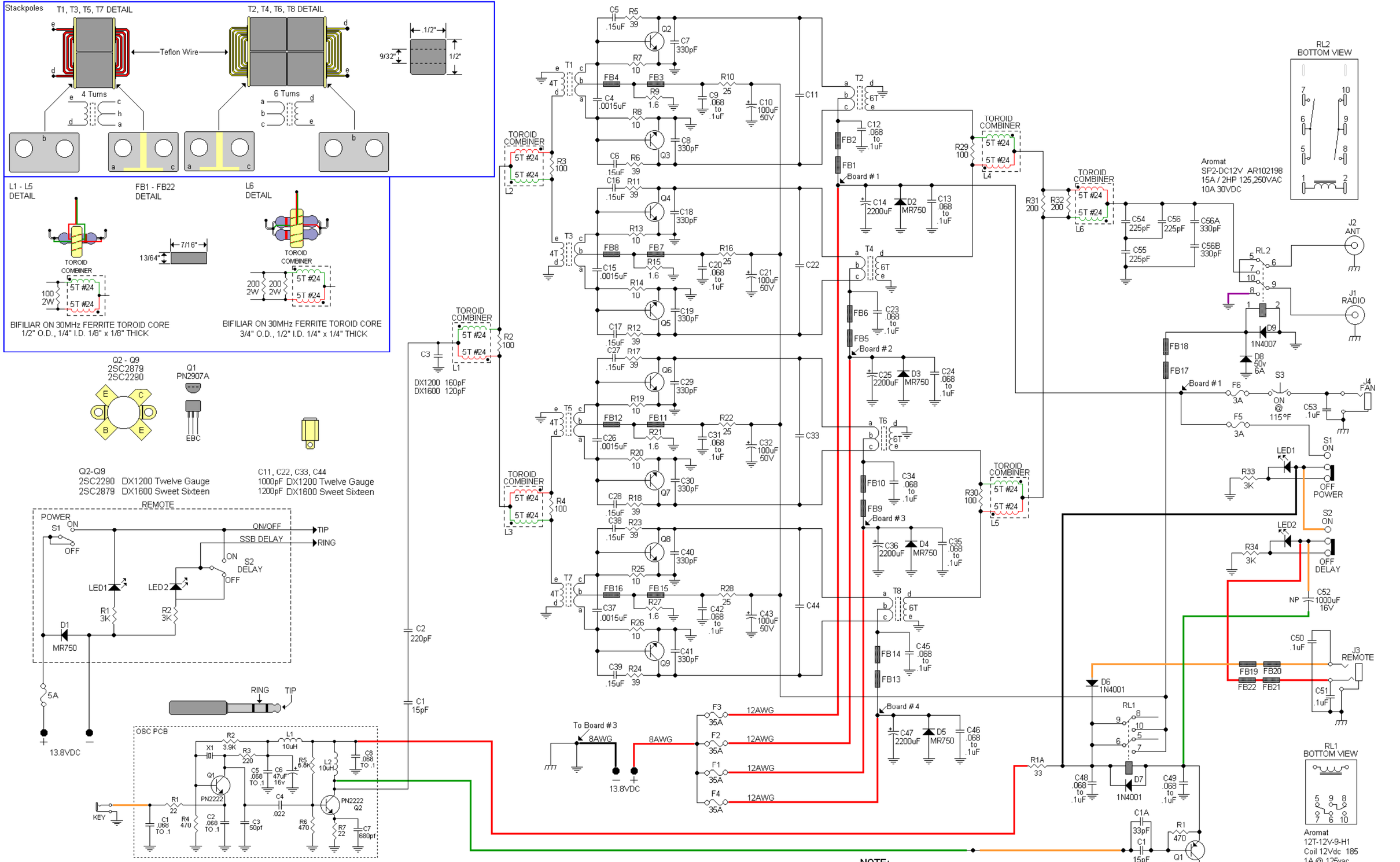

NOTE:

1. The wire colors used in this diagram will vary from the amp. Also the wire color will vary from amp to amp.
2. The component type will vary from amp to amp see text for more information.
3. This diagram is based on current production (2001) out of Texas Star.

Texas Star DX1600 Sweet Sixteen
DX1200 Twelve Gauge
CW Transmitter

Copyright © 2002, CBTricks.com All Rights Reserved

CBTricks.com Rev. #1.2 Jan. 2002